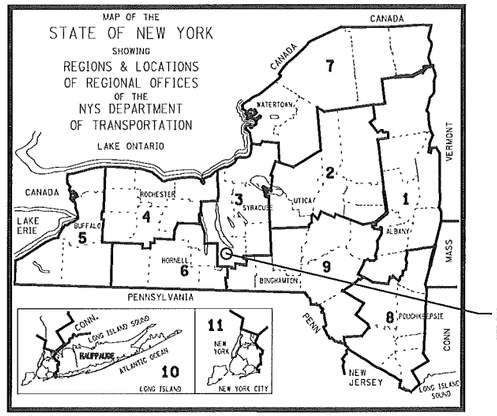

NEWFIELD COVERED BRIDGE PRESERVATION PROJECT
BRIDGE STREET OVER CAYUGA INLET
WEST BRANCH IN TOWN OF NEWFIELD
IN TOMPKINS COUNTY

P.I.N 3755.03 B.I.N. 3210210
TOMPKINS COUNTY CONTRACT NUMBER HW-10-14
12 SHEETS TOMPKINS COUNTY

PROJECT LOCATION:

NEWFIELD COVERED BRIDGE, BRIDGE STREET OVER CAYUGA INLET WEST BRANCH IS LOCATED IN THE TOWN OF NEWFIELD IN TOMPKINS COUNTY.

WORK DESCRIPTION

THIS PROJECT WILL REHABILITATE EXISTING NEWFIELD COVERED BRIDGE AND INSTALL FIRE CONTROL PROTECTION SYSTEM.

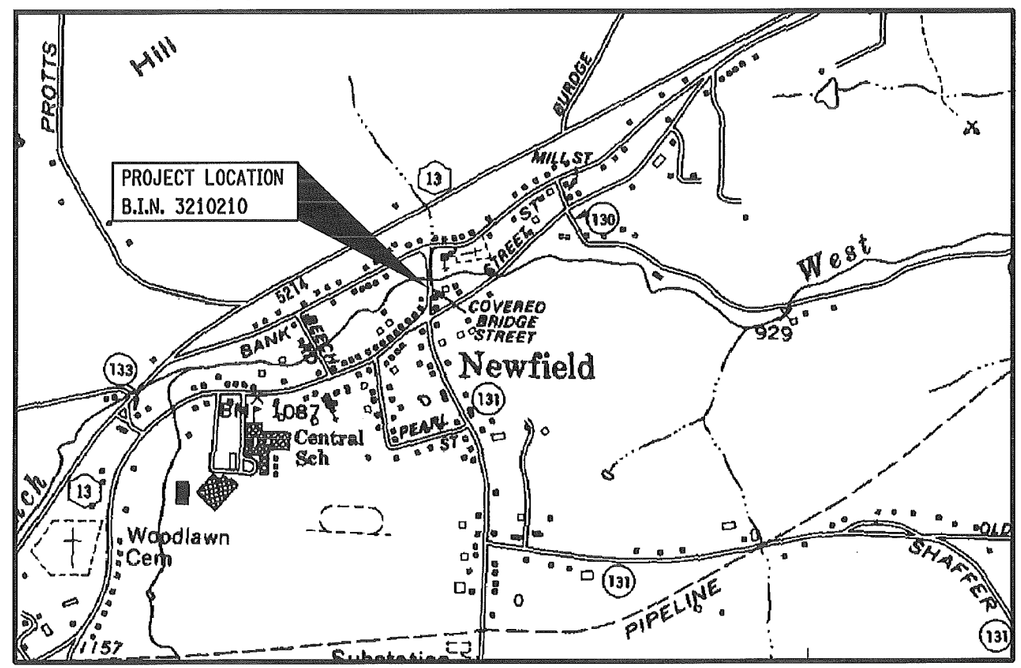

PROJECT LOCATION
NTS

INDEX OF DRAWINGS

COVER SHEET
GN-1 GENERAL NOTES AND ESTIMATE OF QUANTITIES
ST-1 GENERAL PLAN AND ELEVATION
ST-2 NORTH ABUTMENT CONCRETE REMOVAL DETAILS
ST-3 NORTH ABUTMENT CONCRETE REPLACEMENT DETAILS
ST-4 SOUTH ABUTMENT DRAINAGE ELEVATIONS AND SECTIONS
ST-5 NORTH APPROACH SLAB, JOINT AND DRAINAGE DETAILS
ST-6 CONCRETE TRANSVERSE DRAINAGE DETAILS
ST-7 AREAS OF RE-POINTING AND NEW GROUTED STONE
ST-8 FIRE CONTROL PROTECTION GENERAL PLAN AND ELEVATION
ST-9 TIMBER CURB DETAILS (1 OF 2)
ST-10 TIMBER CURB DETAILS (2 OF 2)

PREPARED BY 12/3/14
ANTHONY M. PAPILE, P.E.
PRINCIPAL ENGINEER VI
CHA, INC.
N.Y.S. P.E. NO. 067381
DATE

PREPARED BY 12/2/14
DAVID W. FRANZ, P.E.
SENIOR ENGINEER VI
CHA, INC.
N.Y.S. P.E. NO. 067843-1
DATE

APPROVED BY 12/2/14
JEFFREY B. SMITH, DIRECTOR
TOMPKINS COUNTY HIGHWAY
DATE

ALL WORK CONTEMPLATED UNDER THIS CONTRACT IS TO BE COVERED BY AND IN CONFORMITY WITH THE NEW YORK DEPARTMENT OF TRANSPORTATION STANDARD SPECIFICATIONS OF MAY 1 2008, EXCEPT AS MODIFIED ON THESE PLANS AND IN THE ITEMIZED PROPOSAL.

IT IS A VIOLATION OF LAW FOR ANY PERSON, UNLESS THEY ARE ACTING UNDER THE DIRECTION OF A LICENSED PROFESSIONAL ENGINEER, ARCHITECT, LANDSCAPE ARCHITECT OR LAND SURVEYOR TO ALTER AN ITEM IN ANY WAY. IF AN ITEM BEARING THE STAMP OF A LICENSED PROFESSIONAL IS ALTERED, THE ALTERING ENGINEER, ARCHITECT, LANDSCAPE ARCHITECT OR LAND SURVEYOR SHALL STAMP THE DOCUMENT AND INCLUDE THE NOTATION "ALTERED BY" FOLLOWED BY THEIR SIGNATURE, THE DATE OF SUCH ALTERATION, AND A SPECIFIC DESCRIPTION OF THE ALTERATION.

TOMPKINS COUNTY
HIGHWAY DIVISION

MARCH 2014

CHA PROJECT NO.: 23601

Drawing Copyright © 2014

CHA
III Winners Circle, PO Box 5269 • Albany, NY 12205-0269
Main: (518) 453-4500 • www.chacompanies.com

FILE NAME = V:\Projects\ANY\K2\23601\CADD_MSTN\23601_cpb_cov.dgn
DATE/TIME = 12/1/2014
USER = 3293

GENERAL NOTES:

DESIGN SPECIFICATIONS: NEW YORK STATE DEPARTMENT OF TRANSPORTATION STANDARD SPECIFICATIONS FOR HIGHWAY BRIDGES WITH ALL PROVISIONS IN EFFECT AS OF (11/20/2014). (FOR DESIGN PURPOSES, COMPRESSIVE STRENGTH OF CONCRETE FOR SUBSTRUCTURES AND DECK SLABS AT 28 DAYS: f'c = 3000 psi.)

DETAILS ON THE DRAWINGS LABELED AS "NOT TO SCALE" ARE INTENTIONALLY DRAWN NOT TO SCALE FOR VISUAL CLARITY. ALL OTHER DETAILS FOR WHICH NO SCALE IS SHOWN ARE DRAWN PROPORTIONAL AND ARE FULLY DIMENSIONED.

ALL SHOP DRAWINGS SUBMITTED FOR THIS PROJECT SHALL BE IN US CUSTOMARY UNITS.

THE COST OF WATER USED FOR COMPACTION OF SELECT FILL ITEMS SHALL BE INCLUDED IN THE UNIT PRICE BID FOR ITEM 203.21 - SELECT STRUCTURE FILL.

THE COST OF ALL JOINT MATERIAL SHALL BE INCLUDED IN THE UNIT PRICES BID FOR THE VARIOUS ITEMS OF THE CONTRACT, UNLESS OTHERWISE SPECIFIED ON THE PLANS.

THIS BRIDGE, INCLUDING EXISTING ELEMENTS AND THOSE REPAIRED OR REPLACED UNDER THIS CONTRACT, SHALL BE MAINTAINED IN ACCORDANCE WITH THE GUIDELINES CONTAINED IN THE CURRENT EDITION OF THE AASHTO MAINTENANCE MANUAL: THE MAINTENANCE AND MANAGEMENT OF ROADWAYS AND BRIDGES.

UNLESS OTHERWISE INDICATED ON THE PLANS, WORK TO BE PERFORMED UNDER THIS CONTRACT DOES NOT REQUIRE THE DISTURBING, DESTRUCTION OR REMOVAL OF ANY KNOWN MATERIALS CONTAINING ASBESTOS. UNLESS OTHERWISE INDICATED ON THE PLANS, IT IS THE EXPRESS INTENT OF THIS CONTRACT THAT THESE MATERIALS NOT BE DISTURBED IN ANY WAY. SHOULD THE CONTRACTOR BE FORCED TO DISTURB IN ANY WAY ANY SUCH MATERIALS, THE CONTRACTOR SHALL FIRST BE FAMILIAR WITH INDUSTRIAL CODE RULE 56 OF THE N.Y.S. DEPARTMENT OF LABOR. THE CONTRACTOR SHALL ALSO OBTAIN WRITTEN PERMISSION FROM TOMPKINS COUNTY BEFORE PROCEEDING.

THE CONTRACTOR SHOULD BE AWARE THAT REINFORCING BAR LISTS FOR BRIDGE WORK ARE NOT INCLUDED IN THE CONTRACT PLANS AND THE PROVISIONS OF SPECIFICATION SECTIONS 556 SHALL APPLY. THE COST FOR FURNISHING AND PLACING BAR REINFORCEMENT FOR THE BRIDGE WORK, INCLUDING PREPARATION OF THE BAR LIST AND PLACEMENT DRAWINGS, SHALL BE INCLUDED IN THE UNIT PRICE BID FOR THE FOLLOWING ITEMS:
CONCRETE FOR STRUCTURES, CLASS HP ITEM 555.09
THE BAR LIST AND PLACEMENT DRAWINGS SHALL BE SUBMITTED TO THE ENGINEER FOR APPROVAL.

SUBSTRUCTURE NOTES:

ALL PLACEMENTS OF SELECT STRUCTURE FILL, ITEM 203.21, SHALL BE COMPACTED TO 95 PERCENT OF STANDARD PROCTOR MAXIMUM DENSITY.

REMOVAL NOTES:

EXISTING SUBSTRUCTURE SHALL BE REMOVED WITHIN THE LIMITS SHOWN ON THE PLANS UNDER ITEM 580.01 IN THE BRIDGE ESTIMATE.

RECORD PLANS FOR THIS STRUCTURE ARE NOT AVAILABLE.

RECONSTRUCTION NOTES:

THE CONTRACTOR'S ATTENTION IS DIRECTED TO THE FACT THAT, DUE TO THE NATURE OF RECONSTRUCTION PROJECTS, THE EXACT EXTENT OF RECONSTRUCTION WORK CANNOT ALWAYS BE ACCURATELY DETERMINED PRIOR TO THE COMMENCEMENT OF WORK. THESE CONTRACT DOCUMENTS HAVE BEEN PREPARED BASED ON FIELD INSPECTION AND OTHER INFORMATION AVAILABLE AT THE TIME. ACTUAL FIELD CONDITIONS MAY REQUIRE MODIFICATIONS TO CONSTRUCTION DETAILS AND WORK QUANTITIES. THE CONTRACTOR SHALL PERFORM THE WORK IN ACCORDANCE WITH FIELD CONDITIONS.

THE CONTRACTOR SHALL VERIFY DIMENSIONS NECESSARY FOR THE PROPER FIT OF STEEL PIECES PRIOR TO THE FABRICATION OF THE STEEL. THE COST OF FIELD VERIFYING DIMENSIONS SHALL BE INCLUDED IN THE PRICE BID FOR STRUCTURAL STEEL ITEMS.

THE CONTRACTOR SHALL PERFORM ALL WORK WITH CARE SO THAT ANY MATERIALS WHICH ARE TO REMAIN IN PLACE, OR WHICH ARE TO REMAIN THE PROPERTY OF THE COUNTY, WILL NOT BE DAMAGED. IF THE CONTRACTOR DAMAGES ANY MATERIALS WHICH ARE TO REMAIN IN PLACE OR WHICH ARE TO REMAIN THE PROPERTY OF THE COUNTY, THE DAMAGED MATERIALS SHALL BE REPAIRED OR REPLACED IN A MANNER SATISFACTORY TO THE ENGINEER AT THE EXPENSE OF THE CONTRACTOR.

WHENEVER ITEMS IN THE CONTRACT REQUIRE MATERIALS TO BE REMOVED AND DISPOSED OF, THE COST OF SUPPLYING A DISPOSAL AREA AND TRANSPORTATION TO THAT AREA SHALL BE INCLUDED IN THE UNIT PRICES BID FOR THOSE ITEMS.

DURING REMOVAL OPERATIONS, THE CONTRACTOR SHALL NOT BE ALLOWED TO DROP WASTE CONCRETE, DEBRIS AND OTHER MATERIAL TO THE AREA BELOW THE BRIDGE EXCEPT WHERE THE PLANS SPECIFICALLY PERMIT THE DROPPING OF MATERIAL. PLATFORMS, NETS, SCREENS OR OTHER PROTECTIVE DEVICES SHALL BE USED TO CATCH THE MATERIAL. IF THE ENGINEER DETERMINES THAT ADEQUATE PROTECTIVE DEVICES ARE NOT BEING EMPLOYED, THE WORK SHALL BE SUSPENDED UNTIL ADEQUATE PROTECTION IS PROVIDED.

ALL MATERIAL FALLING ON THE AREA BELOW AND ADJACENT TO THE BRIDGE SHALL BE REMOVED AND DISPOSED OF BY THE CONTRACTOR AT NO COST TO THE STATE.

THE COST OF FURNISHING, INSTALLING, MAINTAINING, REMOVING AND DISPOSING OF ALL PLATFORMS, NETS, SCREENS OR OTHER PROTECTIVE DEVICES SHALL BE INCLUDED IN THE UNIT PRICES BID FOR THE APPROPRIATE ITEMS OF THE CONTRACT.

IF THE STRUCTURE HAS A BRIDGE IDENTIFICATION NUMBER (B.I.N.) PLATE ATTACHED, IT SHALL BE THE CONTRACTOR'S RESPONSIBILITY TO PROTECT IT DURING CONSTRUCTION OR REMOVE AND REMOUNT IT AFTER CONSTRUCTION IS COMPLETED.

MISCELLANEOUS NOTES:

DURING THE COURSE OF CONSTRUCTION, THE CONTRACTOR SHALL CONDUCT OPERATIONS IN SUCH A MANNER AS TO PREVENT OR REDUCE TO A MINIMUM ANY DAMAGE TO ANY STREAM FROM POLLUTION BY DEBRIS, SEDIMENT, OR OTHER FOREIGN MATERIAL, OR FROM MANIPULATION OF EQUIPMENT AND/OR MATERIALS IN OR NEAR SUCH STREAMS. THE CONTRACTOR SHALL NOT RETURN DIRECTLY TO A STREAM ANY WATER WHICH HAS BEEN USED FOR WASH PURPOSES OR OTHER SIMILAR OPERATIONS WHICH CAUSE THIS WATER TO BECOME POLLUTED WITH SAND, SILT, CEMENT, OIL, OR OTHER IMPURITIES. IF THE CONTRACTOR USES WATER FROM A STREAM, THE CONTRACTOR SHALL CONSTRUCT AN INTAKE OR TEMPORARY DAM REQUIRED TO PROTECT AND MAINTAIN WATER RIGHTS AND TO SUSTAIN FISH LIFE DOWNSTREAM.

CLOSURE OF BRIDGE STREET DURING CONSTRUCTION SHALL BE COORDINATED WITH TOMPKINS COUNTY. TOMPKINS COUNTY SHALL PROVIDE, INSTALL AND MAINTAIN CLOSURE AND DETOUR SIGNAGE.

TIMBER PAINTING PER SPECIAL SPECIFICATION 559.02020003 SHALL INCLUDE APPLICATION OF INSECTICIDE/FUNGICIDE AND FIRE RETARDANT COATINGS, PAYMENT ON ONE LUMP SUM BASIS INCLUDES BOTH APPLICATIONS.

ESTIMATE OF QUANTITES

ITEM	DESCRIPTION	UNIT	ESTIMATED QUANTITY
203.03	EMBANKMENT IN PLACE	CY	15
203.21	SELECT STRUCTURAL FILL	CY	15
206.01	STRUCTURE EXCAVATION	CY	55
207.26	PREFABRICATED COMPOSITE STRUCTURAL DRAIN	SY	26
304.15	SUBBASE COURSE, OPTIONAL TYPE	CY	3
402.128102	12.5 F1 TOP COURSE HMA, 80 SERIES COMPACTION	TON	2
402.258902	25 F9 BINDER COURSE HMA, 80 SERIES COMPACTION	TON	5
627.50140008	CUTTING PAVEMENT	LF	16
555.09	CONCRETE FOR STRUCTURES, CLASS HP	CY	9
557.2003	STRUCTURAL APPROACH SLAB WITH INTEGRAL WEARING SURFACE, TYPE 3 FRICTION	SY	8
558.02	LONGITUDINAL SAWCUT GROOVING OF STRUCTURAL SLAB SURFACE	SY	7
559.02020003	INSECTICIDE/FUNGICIDE AND FIRE RETARDANT COATING OF EXISTING TIMBER STRUCTURE	LS	NEC
559.16960118	PROTECTIVE SEALING OF STRUCTURAL CONCRETE	SF	115
559.18960118	PROTECTIVE SEALING OF STRUCTURAL CONCRETE ON NEW BRIDGE DECKS AND BRIDGE DECK OVERLAYS	SF	8
560.0501--75	RUBBLE MASONRY RESTORATION	SF	385
560.0801--75	REPOINTING OF MASONRY JOINTS	LF	235
580.01	REMOVAL OF STRUCTURAL CONCRETE	CY	10
583.03	REMOVAL OF STRUCTURAL CONC. - REPLACEMENT W/ SHOTCRETE, W/ REINFORCEMENT	SF	128
586.02	DRILLING AND GROUTING BOLTS OR REINFORCEMENT BARS	EA	40
587.01	BRIDGE RAILING REMOVAL AND DISPOSAL	LF	2
587.02	BRIDGE RAILING REMOVAL AND STORAGE	LF	40
587.03	INSTALLATION OF STORED BRIDGE RAILING	LF	40
597.20	TIMBER RAILING TRANSITION	EA	2
603.9812	SMOOTH INT. CORRUGATED POLYETHYLENE CULVERT AND STORM DRAIN 12 INCH DIA.	LF	12
604.06	TRANSVERSE DRAINAGE INTERCEPTOR	LF	18
620.04	STONE FILLING (MEDIUM)	CY	2
663.15	DRY HYDRANT (FIRE PROTECTION SYSTEM)	LS	NEC
697.03	FIELD CHANGE PAYMENT (FCP)	DC	7,000
699.040001	MOBILIZATION	LS	NEC

ESTIMATE OF QUANTITIES FOR ADD ALTERNATE ITEM

ITEM	DESCRIPTION	UNIT	ESTIMATED QUANTITY
564.700001	STRUCTURAL STEEL REPLACEMENT	EA	18
594.03	TREATED TIMBER AND LUMBER	CF	353

B.I.N. 3210210

STATE OF NEW YORK
ANTHONY M. PAPILE
EXCELSIOR
067381
LICENSED PROFESSIONAL ENGINEER

No.	Submittal / Revision	App'd	By	Date

TOWN OF NEWFIELD
TOMPKINS COUNTY, NEW YORK

IT IS A VIOLATION OF LAW FOR ANY PERSON, UNLESS THEY ARE ACTING UNDER THE DIRECTION OF A LICENSED PROFESSIONAL ENGINEER, ARCHITECT, LANDSCAPE ARCHITECT OR LAND SURVEYOR, TO ALTER IN ANY WAY AN ITEM BEARING THE STAMP OF A LICENSED PROFESSIONAL ENGINEER, ARCHITECT, LANDSCAPE ARCHITECT OR LAND SURVEYOR. ADDITIONS TO A DOCUMENT MUST BE ALLOWED BY THEIR "ALTERED BY" FOLLOWED BY THEIR SIGNATURE AND A SPECIFIC DESCRIPTION OF THE ALTERATION.

Drawing Copyright © 2013

CHA
III Winners Circle, PO Box 5269 - Albany, NY 12205-0269
Mail: (518) 453-4500 • www.chacompanies.com

Designed: SMJ | Drawn: PKR | Checked: RDH

NEWFIELD COVERED BRIDGE
BRIDGE STREET OVER
CAYUGA INLET WEST BRANCH

GENERAL NOTES AND
ESTIMATE OF QUANTITIES

Issue Date: 12/1/2014 | Project No.: 23601 | Scale: AS- NOTED

GN-1
SHEET 1

FILE NAME = W:\Projects\ANY\K2\23601\CADD_MSTN\23601_cpb_tbl_est.dgn
DATE/TIME = 12/1/2014
USER = 3293

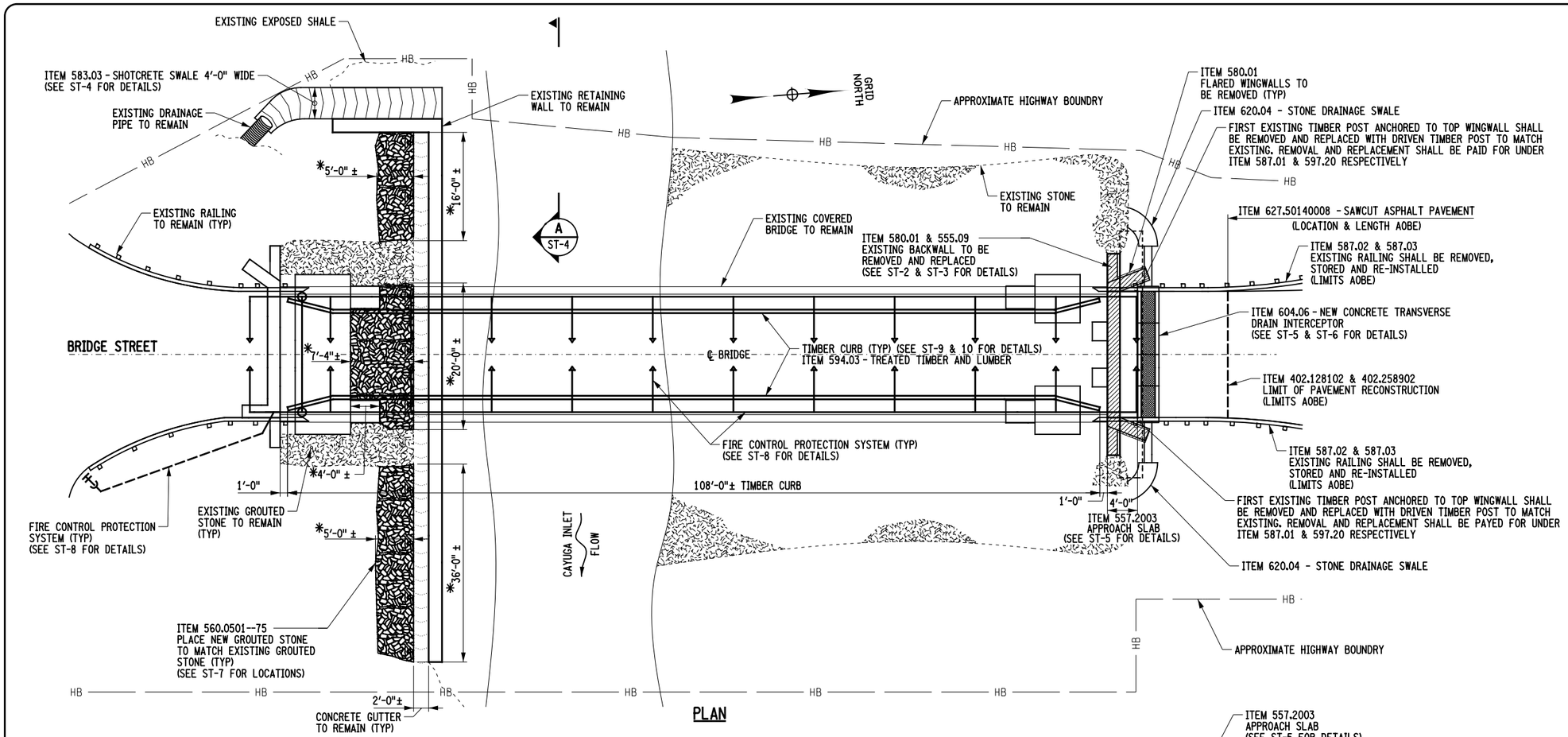

PLAN

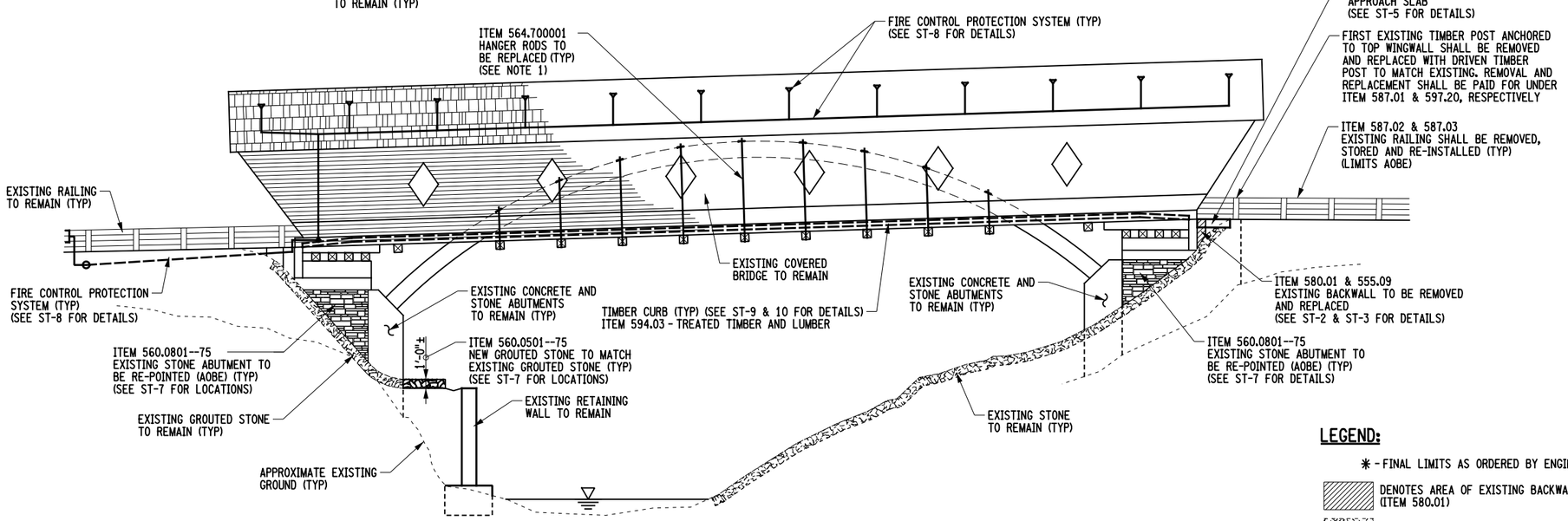

ELEVATION

NOTES:

1. ALL HANGER RODS TO BE REPLACED IN KIND WITH A572 GRADE 50 GALVANIZED PARTIALLY THREADED RODS, A563 GRADE DH NUTS, AND F436 TYPE 1 WASHERS. ONLY ONE ROD SHALL BE REPLACED AT ONE TIME. THE RODS SHALL BE PAINTED BLACK TO MATCH THE COLOR OF THE EXISTING RODS. PAINT SHALL MEET THE REQUIREMENTS OF SECTION 708-06 OF THE NYSDOT STANDARD SPECIFICATIONS AND THE COST SHALL BE INCLUDED IN ITEM 564.700001. TIMBER LEVELING BLOCKS BETWEEN HANGER ROD NUT AND TIMBER ARCH SHALL BE REPLACED WITH SEASONED WHITE OAK (AOBE) AND THE COST SHALL BE INCLUDED IN ITEM 564.700001. THIS ITEM IS SUBJECT TO ADD ALTERNATE PROVISIONS.
2. DETAILS ON THE DRAWINGS LABELED AS "NOT TO SCALE" ARE INTENTIONALLY DRAWN NOT TO SCALE FOR VISUAL CLARITY. ALL OTHER DETAILS, FOR WHICH NO SCALE IS SHOWN, ARE DRAWN PROPORTIONAL AND ARE FULLY DIMENSIONED.

B.I.N. 3210210

LEGEND:

✱ - FINAL LIMITS AS ORDERED BY ENGINEER (AOBE)

DENOTES AREA OF EXISTING BACKWALL REMOVAL (ITEM 580.01)

DENOTES AREA OF EXISTING STONE

DENOTES AREA OF PLACEMENT OF NEW GROUTED STONE TO MATCH EXISTING GROUTED STONE (ITEM 560.0501--75)

8 FT 0 8 FT
SCALE

STATE OF NEW YORK · ANTHONY M. PAPILE · LICENSED PROFESSIONAL ENGINEER · EXCELSIOR · 067381

No.	Submittal / Revision	App'd	By	Date

TOMPKINS COUNTY
TOWN OF NEWFIELD
TOMPKINS COUNTY, NEW YORK

IT IS A VIOLATION OF LAW FOR ANY PERSON, UNLESS THEY ARE ACTING UNDER THE DIRECTION OF A LICENSED PROFESSIONAL ENGINEER, ARCHITECT, LANDSCAPE ARCHITECT OR LAND SURVEYOR, TO ALTER IN ANY WAY, IT AN ITEM BEARING THE STAMP OF A LICENSED PROFESSIONAL ENGINEER, ARCHITECT, LANDSCAPE ARCHITECT OR LAND SURVEYOR. ADDITIONS TO SUCH DOCUMENT AND INCLUDE THE NOTATION "ALTERED BY" FOLLOWED BY THEIR SIGNATURE AND THE SPECIFIC DESCRIPTION OF THE ALTERATION.

Drawing Copyright © 2013
CHA
III Winners Circle, P.O. Box 5269 - Albany, NY 12205-0269
Mail: (518) 453-4500 - www.chacompanies.com

Designed: SMJ | Drawn: PKR | Checked: RDH

NEWFIELD COVERED BRIDGE
BRIDGE STREET OVER
CAYUGA INLET WEST BRANCH

GENERAL PLAN AND ELEVATION

Issue Date: 12/1/2014 | Project No.: 23601 | Scale: AS NOTED

ST-1
SHEET 2

FILE NAME = V:\Projects\ANY\K2\23601\CADD_MSTN\23601_cpb_gen.dgn
DATE/TIME = 12/1/2014
USER = 3293

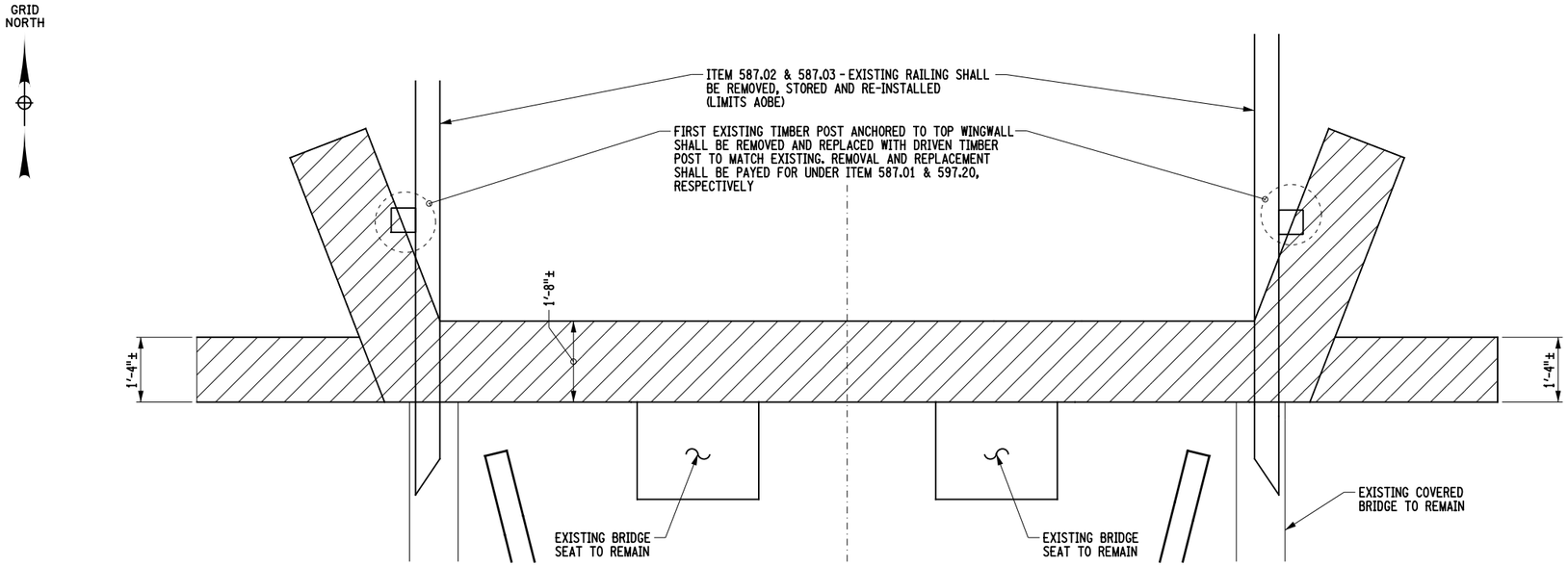

NORTH ABUTMENT CONCRETE REMOVAL PLAN

NOT TO SCALE

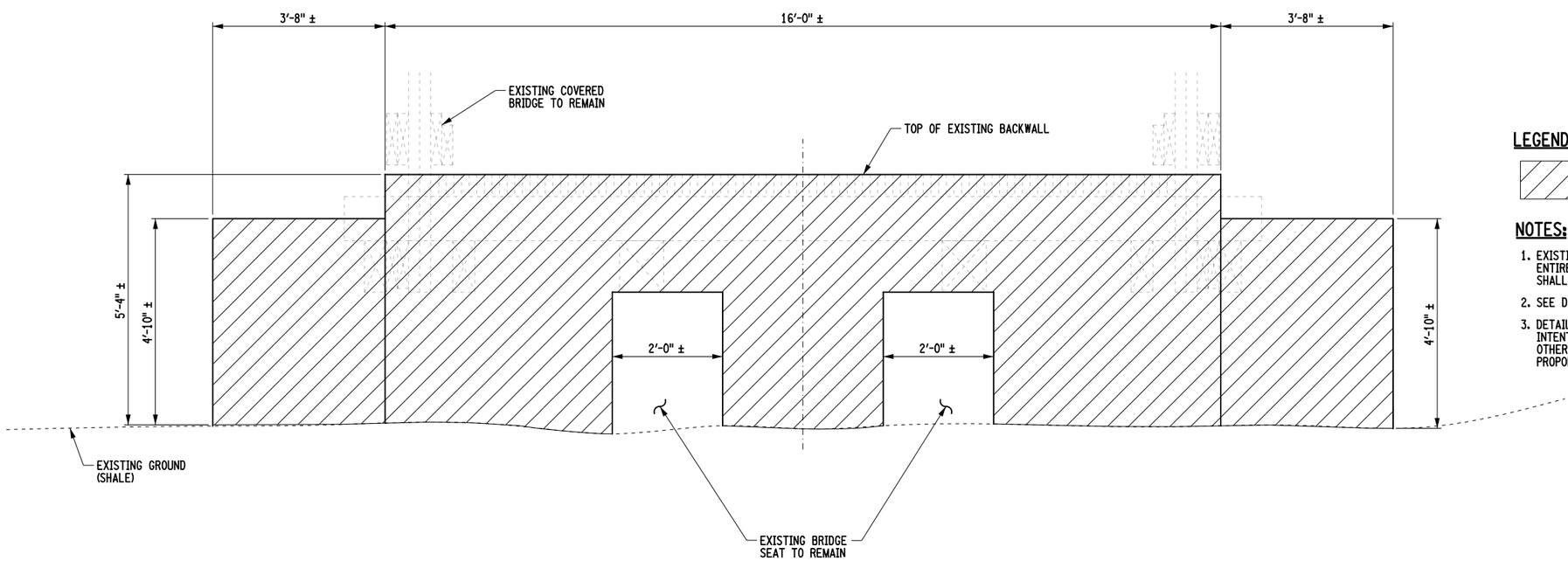

NORTH ABUTMENT CONCRETE REMOVAL ELEVATION

NOT TO SCALE

LEGEND

DENOTES AREA OF EXISTING BACKWALL REMOVAL (ITEM 580.01)

NOTES:

1. EXISTING BACKWALL AND WINGWALLS SHALL BE REMOVED IN THEIR ENTIRETY DOWN TO SHALE OR AOBE. THE EXISTING BRIDGE SEATS SHALL REMAIN.
2. SEE DRAWING ST-5 FOR EARTH WORK DETAILS.
3. DETAILS ON THE DRAWINGS LABELED AS "NOT TO SCALE" ARE INTENTIONALLY DRAWN NOT TO SCALE FOR VISUAL CLARITY. ALL OTHER DETAILS, FOR WHICH NO SCALE IS SHOWN, ARE DRAWN PROPORTIONAL AND ARE FULLY DIMENSIONED.

B.I.N. 3210210

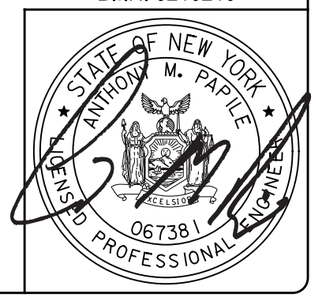

No.	Submittal / Revision	App'd	By	Date

TOWN OF NEWFIELD
TOMPKINS COUNTY, NEW YORK

IT IS A VIOLATION OF LAW FOR ANY PERSON, UNLESS THEY ARE ACTING UNDER THE DIRECTION OF A LICENSED PROFESSIONAL ENGINEER, ARCHITECT, LANDSCAPE ARCHITECT OR LAND SURVEYOR, TO ALTER IN ANY WAY AN ITEM BEARING THE STAMP OF A LICENSED PROFESSIONAL ENGINEER, ARCHITECT, LANDSCAPE ARCHITECT OR LAND SURVEYOR. IF AN ITEM BEARING THE STAMP OF A LICENSED PROFESSIONAL ENGINEER, ARCHITECT, LANDSCAPE ARCHITECT OR LAND SURVEYOR SHALL STAMP THE DOCUMENT AND INCLUDE THE NOTATION "ALTERED BY" FOLLOWED BY THEIR SIGNATURE AND A SPECIFIC DESCRIPTION OF THE ALTERATION.

Drawing Copyright © 2013

CHA
III Winners Circle, PO Box 5269 - Albany, NY 12205-0269
Mail: (518) 453-4500 - www.chacompanies.com

Designed: SMJ | Drawn: PKR | Checked: RDH

NEWFIELD COVERED BRIDGE
BRIDGE STREET OVER
CAYUGA INLET WEST BRANCH

NORTH ABUTMENT
CONCRETE REMOVAL DETAILS

Issue Date: 12/12/2014 | Project No.: 23601 | Scale: AS NOTED

ST-2

SHEET 3

FILE NAME = V:\Projects\ANY\K2\23601\CADD_MSTN\23601_cpb_dtl_cts_01.dgn
DATE/TIME = 12/1/2014
USER = 3293

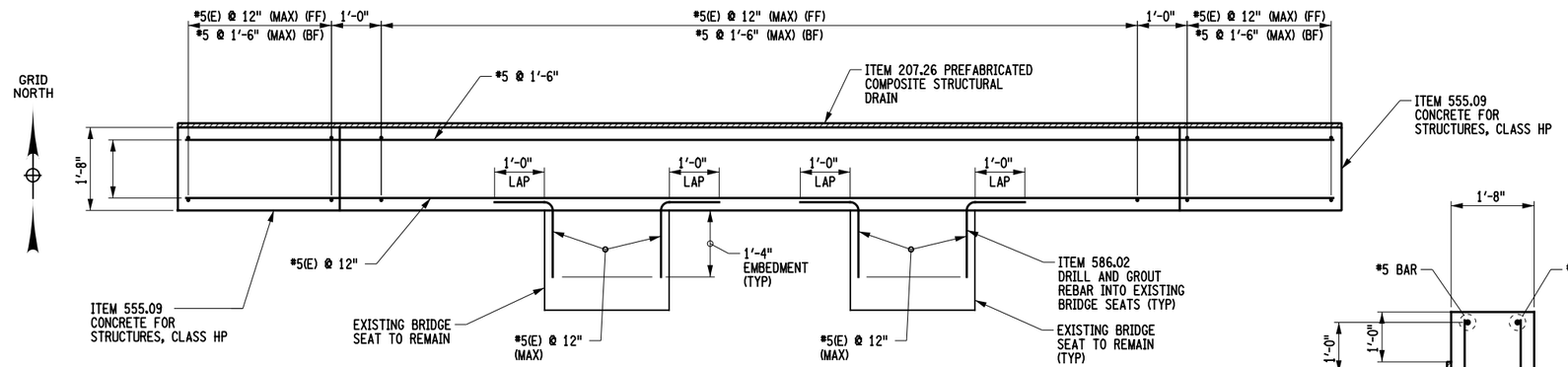

NORTH ABUTMENT CONCRETE REPLACEMENT PLAN

NOT TO SCALE

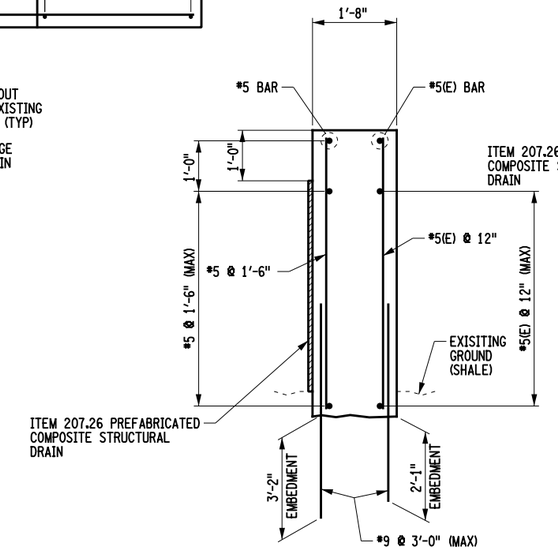

SECTION A-A

NOT TO SCALE

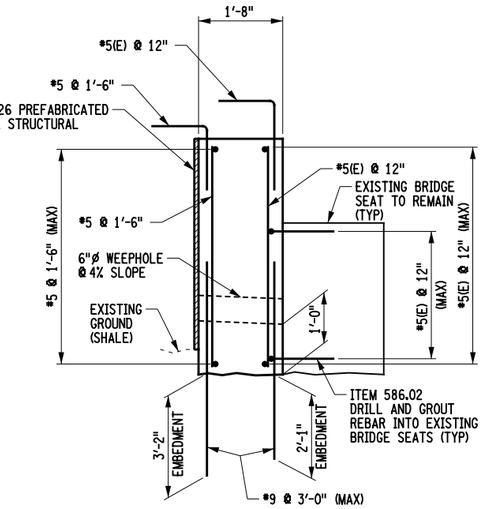

SECTION B-B

NOT TO SCALE

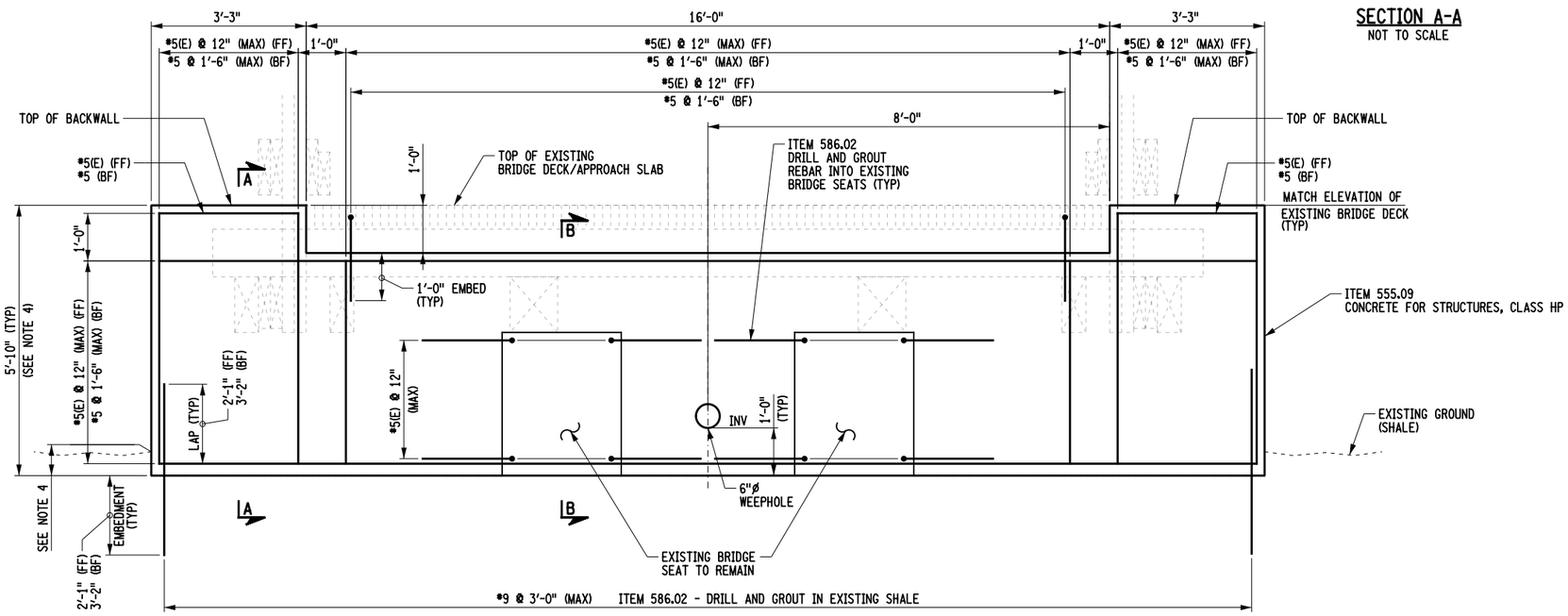

NORTH ABUTMENT CONCRETE REPLACEMENT ELEVATION

NOT TO SCALE

NOTES:

1. (E) - INDICATES EPOXY COATED REBAR.
2. COVER FOR STEEL REINFORCEMENT SHALL BE 2" UNLESS OTHERWISE NOTED.
3. SEE DRAWING ST-5 FOR EARTH WORK DETAILS.
4. REMOVAL OF 6" OF WEATHERED/LOOSE SHALE SHALL BE PERFORMED TO KEY IN PROPOSED BACKWALL. ACTUAL LIMITS OF SHALE REMOVAL AOBE; WALL HEIGHT MAY NEED TO BE ADJUSTED.
5. (FF) - DENOTES FRONT FACE
   (BF) - DENOTES BACK FACE
6. PROTECTIVE SEALANT (ITEM 559.16960118) SHALL BE APPLIED TO ALL EXPOSED CONCRETE SURFACES.
7. THE CONTRACTOR SHOULD BE AWARE THAT REINFORCING BAR LISTS FOR BRIDGE WORK ARE NOT INCLUDED IN THE CONTRACT PLANS AND THE PROVISIONS OF SPECIFICATION SECTIONS 556 SHALL APPLY. THE COST FOR FURNISHING AND PLACING BAR REINFORCEMENT FOR THE BRIDGE WORK, INCLUDING PREPARATION OF THE BAR LIST AND PLACEMENT DRAWINGS, SHALL BE INCLUDED IN THE UNIT PRICE BID FOR THE FOLLOWING ITEMS:
   CONCRETE FOR STRUCTURES, CLASS HP ITEM 555.09
   THE BAR LIST AND PLACEMENT DRAWINGS SHALL BE SUBMITTED TO THE ENGINEER FOR APPROVAL.
8. DETAILS ON THE DRAWINGS LABELED AS "NOT TO SCALE" ARE INTENTIONALLY DRAWN NOT TO SCALE FOR VISUAL CLARITY. ALL OTHER DETAILS, FOR WHICH NO SCALE IS SHOWN, ARE DRAWN PROPORTIONAL AND ARE FULLY DIMENSIONED.

B.I.N. 3210210

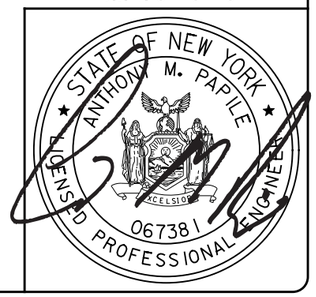

No.	Submittal / Revision	App'd	By	Date

TOWN OF NEWFIELD
TOMPKINS COUNTY, NEW YORK

IT IS A VIOLATION OF LAW FOR ANY PERSON, UNLESS THEY ARE ACTING UNDER THE DIRECTION OF A LICENSED PROFESSIONAL ENGINEER, ARCHITECT, LANDSCAPE ARCHITECT OR LAND SURVEYOR, TO ALTER IN ANY WAY, IF AN ITEM BEARING THE STAMP OF A LICENSED PROFESSIONAL IS ALTERED, THE ALTERING ENGINEER, ARCHITECT, LANDSCAPE ARCHITECT OR LAND SURVEYOR SHALL STAMP THE DOCUMENT AND INCLUDE THE NOTATION "ALTERED BY" FOLLOWED BY THEIR SIGNATURE AND A SPECIFIC DESCRIPTION OF THE ALTERATION.

Drawing Copyright © 2013
CHA
III Winners Circle, PO Box 5269 - Albany, NY 12205-0269
Mail#: (518) 453-4500 - www.chacompanies.com

Designed: SMJ | Drawn: PKR | Checked: RDH

NEWFIELD COVERED BRIDGE
BRIDGE STREET OVER
CAYUGA INLET WEST BRANCH

NORTH ABUTMENT CONCRETE REPLACEMENT DETAILS

Issue Date: 12/12/2014 | Project No.: 23601 | Scale: AS NOTED

ST-3

SHEET 4

FILE NAME = V:\Projects\ANY\K2\23601\CADD_MSTN\23601_cpb_dtl_cte_02.dgn
DATE/TIME = 12/1/2014
USER = 3293

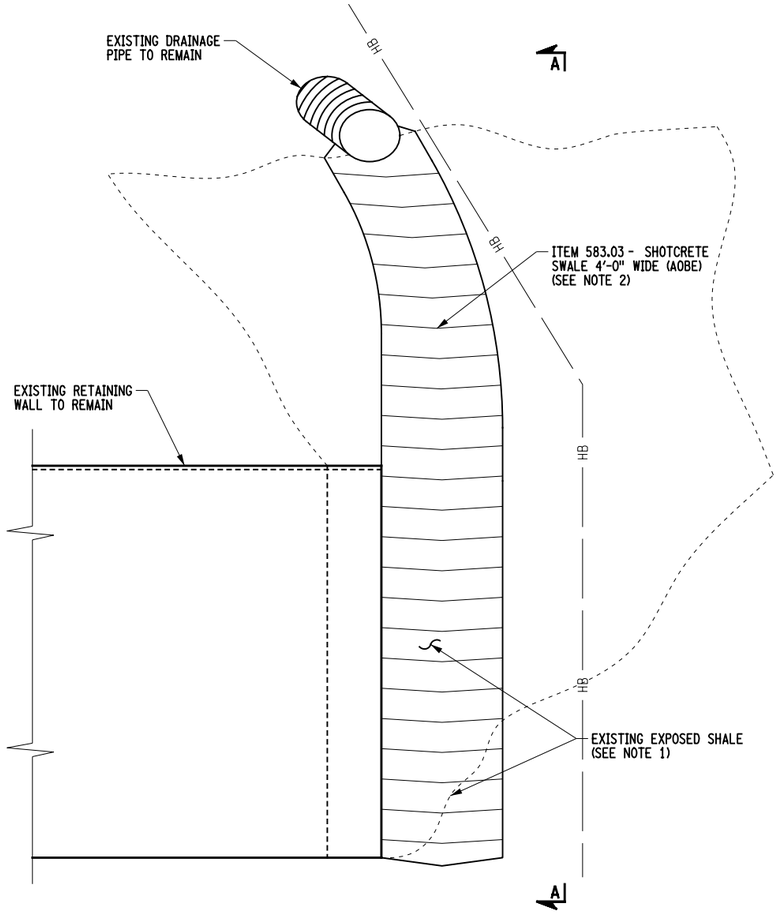

A / ST-1 SOUTH ABUTMENT DRAINAGE SWALE ELEVATION

NOT TO SCALE

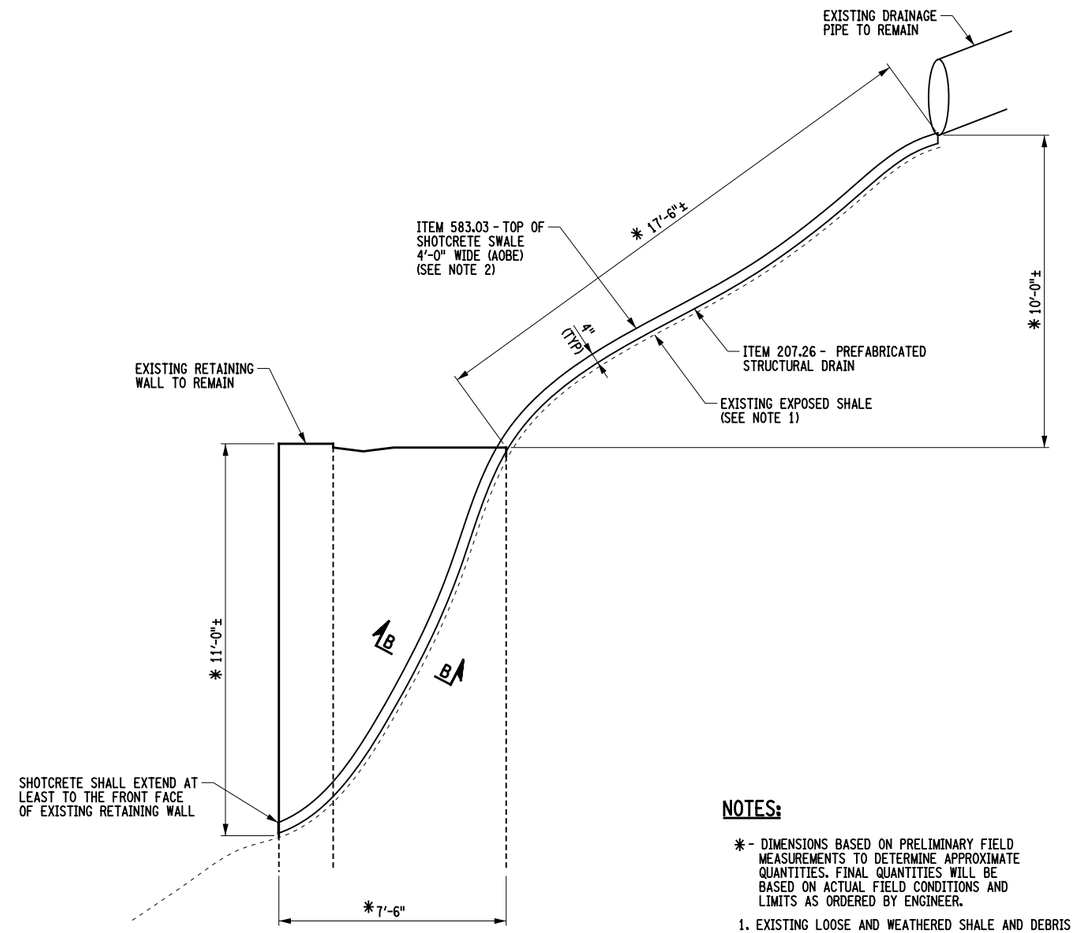

SECTION A-A

NOT TO SCALE

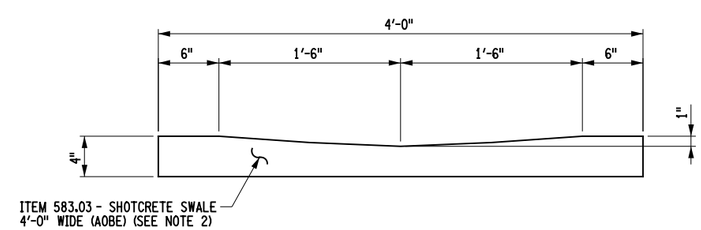

SECTION B-B

NOT TO SCALE

NOTES:

* - DIMENSIONS BASED ON PRELIMINARY FIELD MEASUREMENTS TO DETERMINE APPROXIMATE QUANTITIES. FINAL QUANTITIES WILL BE BASED ON ACTUAL FIELD CONDITIONS AND LIMITS AS ORDERED BY ENGINEER.

1. EXISTING LOOSE AND WEATHERED SHALE AND DEBRIS SHALL BE REMOVED DOWN TO SOUND SHALE AS DIRECTED BY ENGINEER TO ACCOMODATE SHOTCRETE SWALE. COST INCIDENTAL TO FINAL PLACEMENT QUANITY OF ITEM 583.03.
2. SHOTCRETE SHALL BE PLACED TO CREATE A DRAINAGE SWALE 4'-0" WIDE AND 4" THICK. PREFABRICATED COMPOSITE STRUCTURAL DRAIN (ITEM 207.26) SHALL BE PLACED AGAINST SHALE IN AREAS OF SWALE. MECHANICAL ANCHORS AS REQUIRED BY ITEM 583.03 SHALL BE PLACED THROUGH THE PREFABRICATED DRAIN AND INTO THE SHALE.
3. DETAILS ON THE DRAWINGS LABELED AS "NOT TO SCALE" ARE INTENTIONALLY DRAWN NOT TO SCALE FOR VISUAL CLARITY. ALL OTHER DETAILS, FOR WHICH NO SCALE IS SHOWN, ARE DRAWN PROPORTIONAL AND ARE FULLY DIMENSIONED.

B.I.N. 3210210

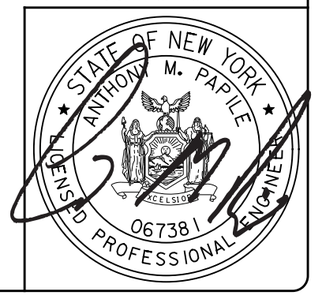

No.	Submittal / Revision	App'd	By	Date

TOWN OF NEWFIELD
TOMPKINS COUNTY, NEW YORK

IT IS A VIOLATION OF LAW FOR ANY PERSON, UNLESS THEY ARE ACTING UNDER THE DIRECTION OF A LICENSED PROFESSIONAL ENGINEER, ARCHITECT, LANDSCAPE ARCHITECT OR LAND SURVEYOR, TO ALTER IN ANY WAY, AN ITEM BEARING THE STAMP OR SEAL OF A LICENSED PROFESSIONAL. IF ITEMS ARE ALTERED, THE ALTERING ENGINEER, ARCHITECT, LANDSCAPE ARCHITECT OR LAND SURVEYOR SHALL STAMP THE DOCUMENT AND INCLUDE THE NOTATION "ALTERED BY" FOLLOWED BY THEIR SIGNATURE AND THE DATE OF SUCH ALTERATION, AND A SPECIFIC DESCRIPTION OF THE ALTERATION.

CHA
Drawing Copyright © 2013
III Winners Circle, PO Box 5269 - Albany, NY 12205-0269
Mail: (518) 453-4500 - www.chacompanies.com

Designed: SMJ | Drawn: PKR | Checked: RDH

NEWFIELD COVERED BRIDGE
BRIDGE STREET OVER
CAYUGA INLET WEST BRANCH

SOUTH ABUTMENT DRAINAGE
ELEVATION AND SECTION

Issue Date: 12/1/2014 | Project No.: 23601 | Scale: AS NOTED

ST-4

SHEET 5

FILE NAME = V:\Projects\ANY\K2\23601\CADD_MSTN\23601_cpb_dtl_cul_01.dgn
DATE/TIME = 12/1/2014
USER = 3293

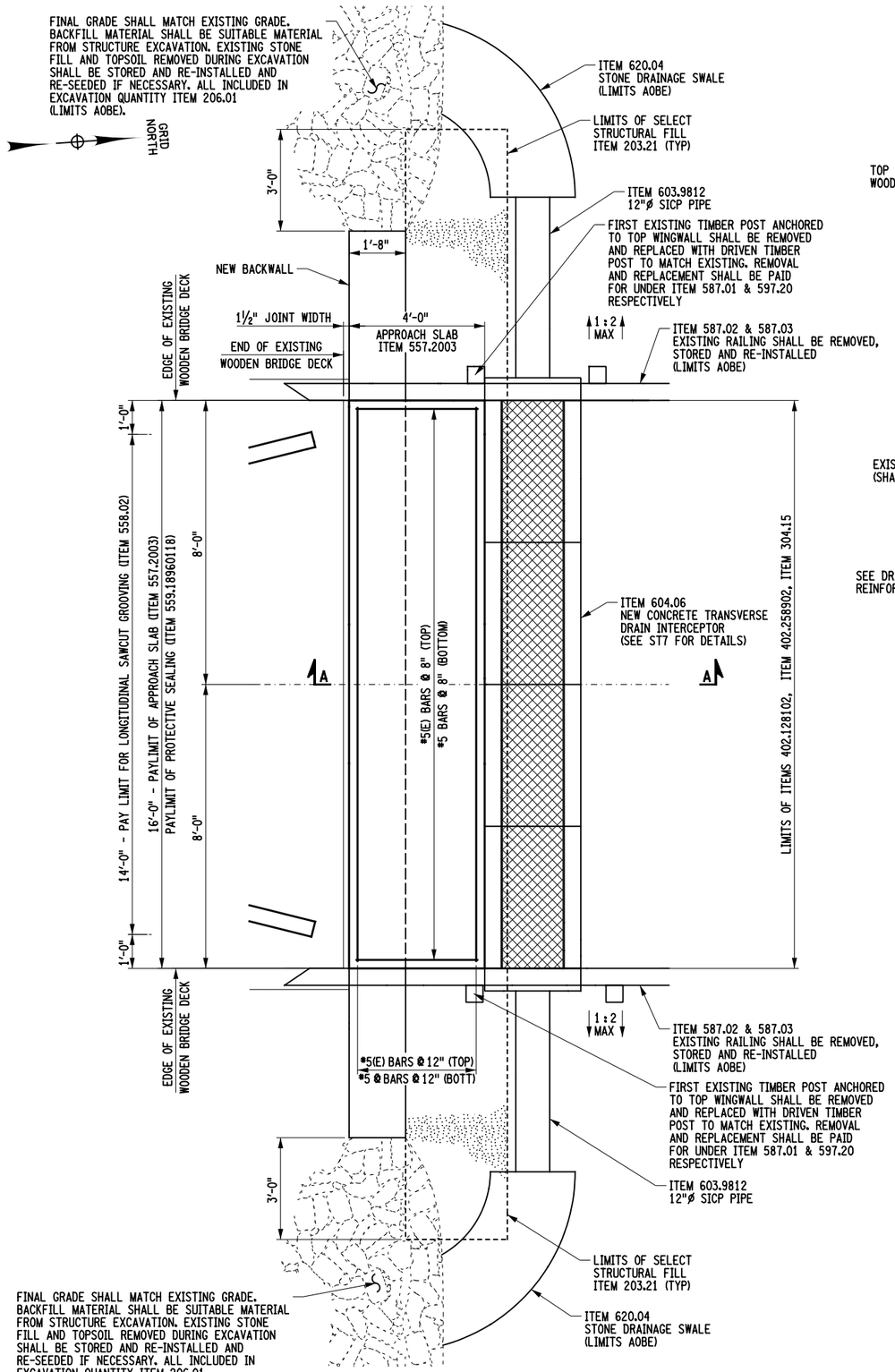

NORTH APPROACH SLAB PLAN
NOT TO SCALE

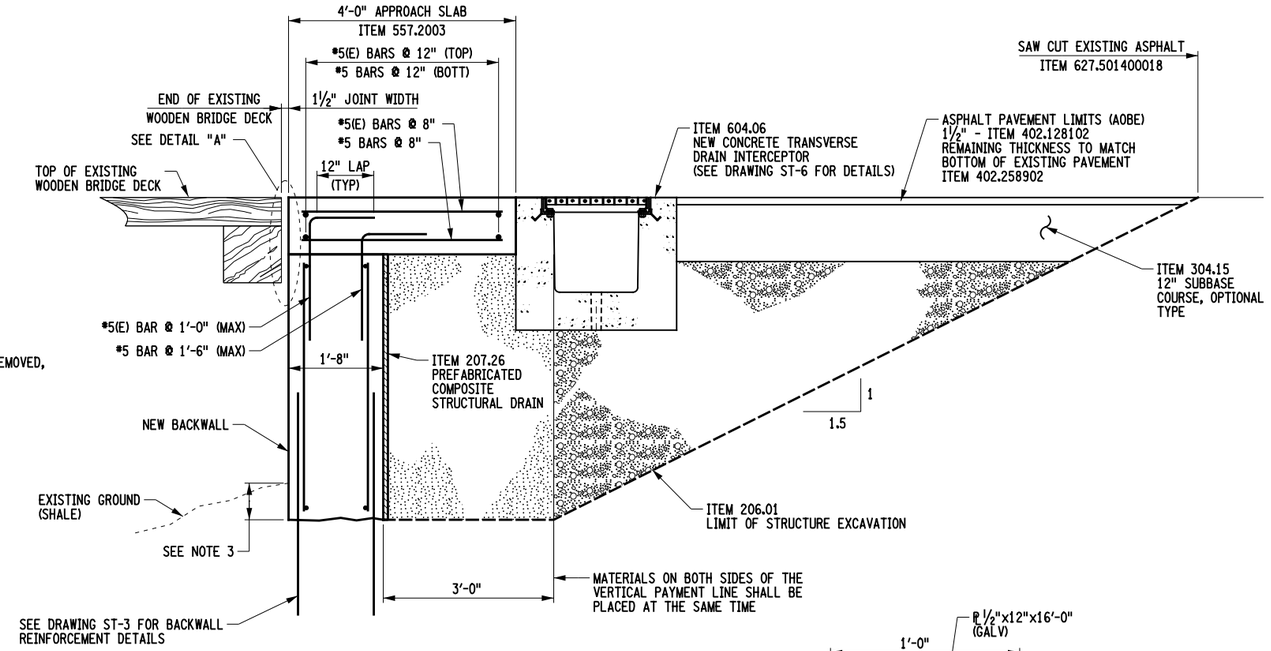

SECTION A-A
NOT TO SCALE

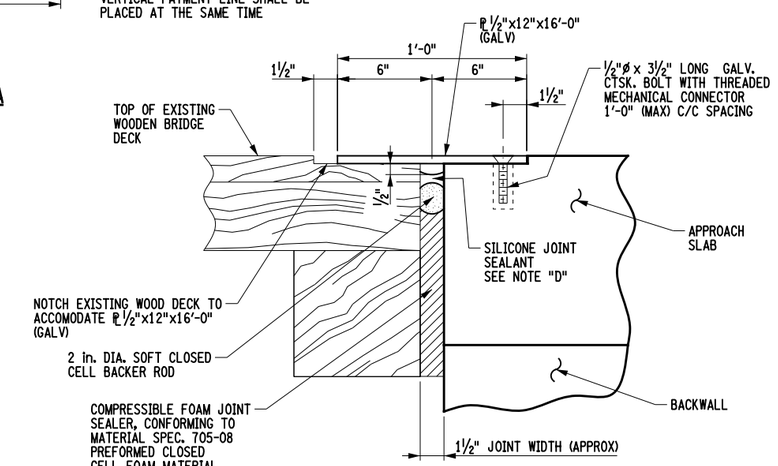

DETAIL "A"
NOT TO SCALE

NOTE:
WORK AND MATERIALS TO INSTALL JOINT AS SHOWN TO BE INCLUDED IN ITEM 557.2003

NOTE "D"

FILL THE RECESS WITH A STRUCTURAL JOINT MATERIAL, LIQUID SEALANT, FROM THE DEPARTMENT'S APPROVED LIST. THE MANUFACTURER'S RECOMMENDATIONS SHALL BE FOLLOWED FOR THOSE SEALANTS THAT REQUIRES A PRIMER. THE CONCRETE SHALL CURE FOR MINIMUM OF 7 DAYS BEFORE JOINT IS SEALED. SEALING SHALL ONLY BE PERFORMED WHEN THE CONCRETE TEMPERATURE IS 40°F OR ABOVE. BOTH JOINT FACES SHALL BE SAND BLASTED TO ROUGHEN THE SURFACE AND TO REMOVE ALL SURFACE MOISTURE AND ANY OTHER MATERIAL THAT MAY INTERFER WITH BOND.

B.I.N. 3210210

LEGEND

- EXISTING STONE TO REMAIN
- SELECT STRUCTURE FILL (ITEM 203.21), COMPACTED TO 95% OF STANDARD PROCTOR MAXIMUM DENSITY
- EMBANKMENT IN PLACE - ITEM 203.03
- LIMIT OF STRUCTURE EXCAVATION - ITEM 206.01

NOTES:

1. (E) - INDICATES EPOXY COATED REBAR.
2. COVER FOR APPROACH SLAB STEEL REINFORCEMENT SHALL BE 3" UNLESS OTHERWISE NOTED.
3. REMOVAL OF 6" OF WEATHERED/LOOSE SHALE IS ASSUMED TO KEY IN PROPOSED BACKWALL. ACTUAL LIMITS OF SHALE REMOVAL AOBE.
4. DETAILS ON THE DRAWINGS LABELED AS "NOT TO SCALE" ARE INTENTIONALLY DRAWN NOT TO SCALE FOR VISUAL CLARITY. ALL OTHER DETAILS, FOR WHICH NO SCALE IS SHOWN, ARE DRAWN PROPORTIONAL AND ARE FULLY DIMENSIONED.

STATE OF NEW YORK · ANTHONY M. PAPILE · LICENSED PROFESSIONAL ENGINEER · 067381

No.	Submittal / Revision	App'd	By	Date

TOWN OF NEWFIELD
TOMPKINS COUNTY, NEW YORK

IT IS A VIOLATION OF LAW FOR ANY PERSON, UNLESS THEY ARE ACTING UNDER THE DIRECTION OF A LICENSED PROFESSIONAL ENGINEER, ARCHITECT, LANDSCAPE ARCHITECT OR LAND SURVEYOR, TO ALTER IN ANY WAY, IF AN ITEM BEARING THE STAMP OF A LICENSED PROFESSIONAL IS ALTERED, THE ALTERING ENGINEER, ARCHITECT, LANDSCAPE ARCHITECT OR LAND SURVEYOR SHALL STAMP THE DOCUMENT AND INCLUDE THE NOTATION "ALTERED BY" FOLLOWED BY THEIR SIGNATURE AND A SPECIFIC DESCRIPTION OF THE ALTERATION.

CHA
Drawing Copyright © 2013
III Winners Circle, PO Box 5269 - Albany, NY 12205-0269
Mail: (518) 453-4500 - www.chacompanies.com

Designed: SMJ | Drawn: PKR | Checked: RDH

NEWFIELD COVERED BRIDGE
BRIDGE STREET OVER
CAYUGA INLET WEST BRANCH

NORTH APPROACH SLAB,
JOINT AND DRAINAGE DETAILS

Issue Date: 12/1/2014 | Project No.: 23601 | Scale: AS NOTED

ST-5
SHEET 6

FILE NAME = V:\Projects\ANY\K2\23601\CADD_MSTN\23601_cpb_slb_apr.dgn
DATE/TIME = 12/1/2014
USER = 3293

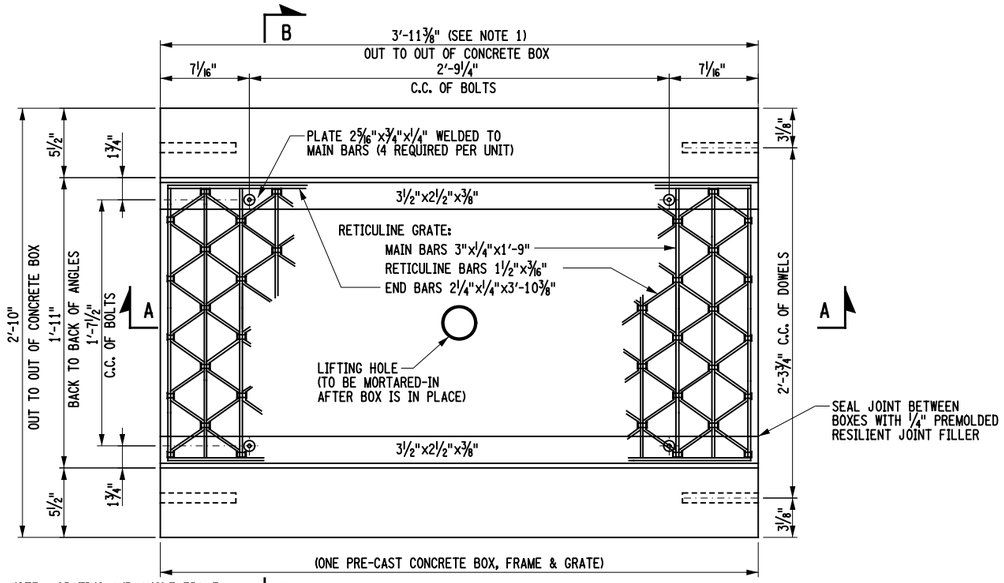

NOTE: GRATING AND ANGLE FRAME TO BE GALVANIZED IN CONFORMANCE WITH SUBSECTION 719-01 TYPE I OF THE STANDARD SPECIFICATION.

TRANSVERSE DRAINAGE INTERCEPTOR PLAN
NOT TO SCALE

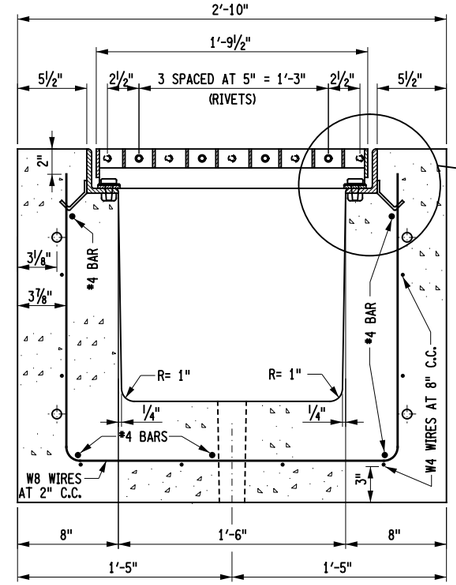

SECTION B-B
NOT TO SCALE

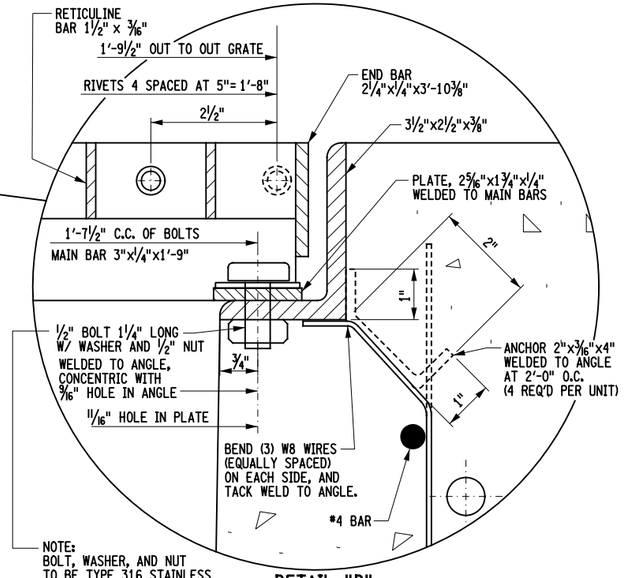

NOTE:
BOLT, WASHER, AND NUT TO BE TYPE 316 STAINLESS STEEL OR MONEL METAL. IN WELDING MONEL METAL NUT TO ANGLE IT IS RECOMMENDED THAT NI ROD #55 BE USED.

DETAIL "D"
NOT TO SCALE

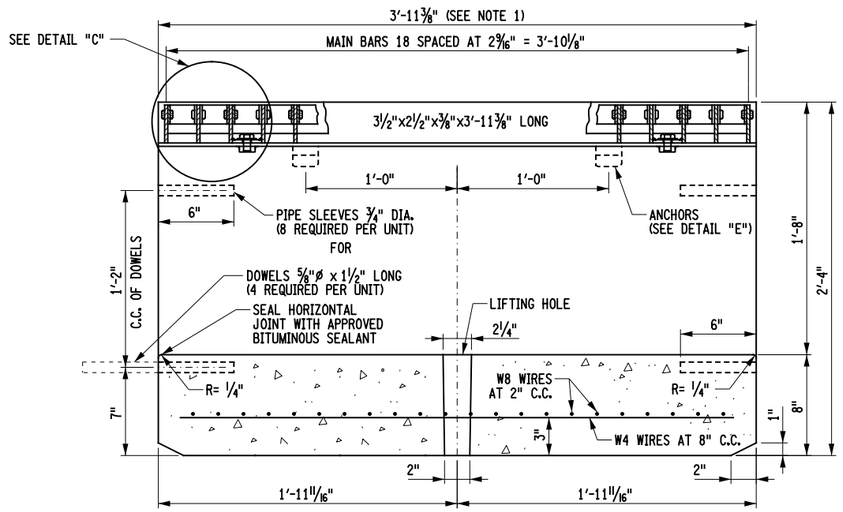

SECTION A-A
NOT TO SCALE

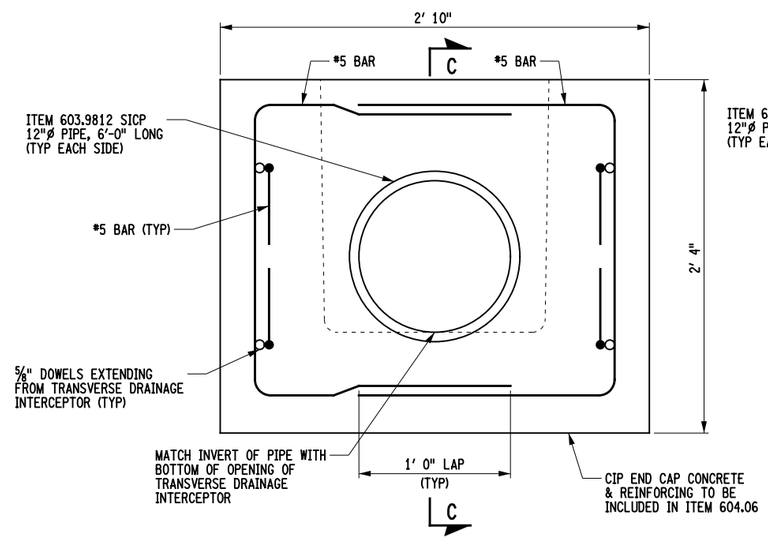

TYPICAL DRAINAGE END CAP DETAIL
NOT TO SCALE

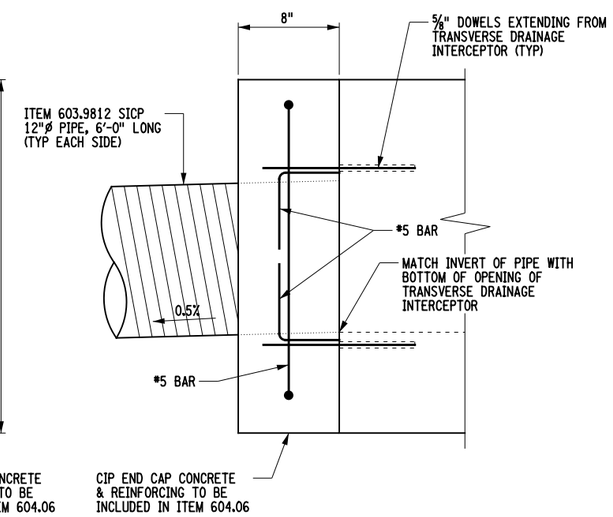

SECTION C-C
NOT TO SCALE

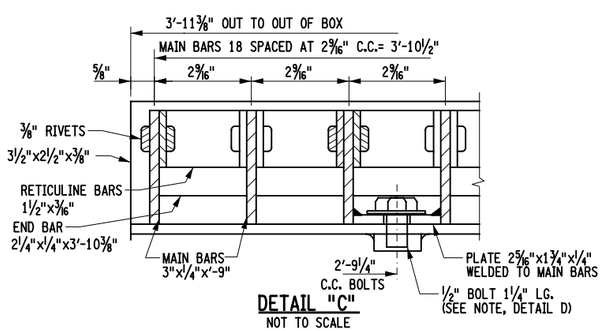

DETAIL "C"
NOT TO SCALE

B.I.N. 3210210

NOTES:
1. DIMENSIONS SHOWN ARE BASED ON A 4'-0" NOMINAL LENGTH. ACTUAL LENGTH CAN VARY DEPENDING ON PRECASTERS CAPABILITIES OR CAST-IN-PLACE OPERATIONS. TOTAL LENGTH EXCLUDING END CAPS SHALL BE 16'-0".
2. (E) - INDICATES EPOXY COATED REBAR.
3. COVER FOR STEEL REINFORCEMENT SHALL BE 2" UNLESS OTHERWISE NOTED.
4. DETAILS ON THE DRAWINGS LABELED AS "NOT TO SCALE" ARE INTENTIONALLY DRAWN NOT TO SCALE FOR VISUAL CLARITY. ALL OTHER DETAILS, FOR WHICH NO SCALE IS SHOWN, ARE DRAWN PROPORTIONAL AND ARE FULLY DIMENSIONED.

STATE OF NEW YORK · ANTHONY M. PAPILE · LICENSED PROFESSIONAL ENGINEER · 067381

No.	Submittal / Revision	App'd	By	Date

TOWN OF NEWFIELD
TOMPKINS COUNTY, NEW YORK

IT IS A VIOLATION OF LAW FOR ANY PERSON, UNLESS THEY ARE ACTING UNDER THE DIRECTION OF A LICENSED PROFESSIONAL ENGINEER, ARCHITECT, LANDSCAPE ARCHITECT OR LAND SURVEYOR, TO ALTER IN ANY WAY, AN ITEM BEARING THE STAMP OF A LICENSED PROFESSIONAL ENGINEER, ARCHITECT, LANDSCAPE ARCHITECT OR LAND SURVEYOR. IT IS A VIOLATION OF LAW TO ALTER THIS DOCUMENT AND INCLUDE THE NOTATION "ALTERED BY" FOLLOWED BY THEIR SIGNATURE AND SPECIFIC DESCRIPTION OF THE ALTERATION.

Drawing Copyright © 2013

CHA
III Winners Circle, PO Box 5269 - Albany, NY 12205-0269
Main: (518) 453-4500 - www.chacompanies.com

Designed: SMJ | Drawn: PKR | Checked: RDH

NEWFIELD COVERED BRIDGE
BRIDGE STREET OVER
CAYUGA INLET WEST BRANCH

CONCRETE TRANSVERSE
DRAINAGE DETAILS

Issue Date: 12/12/2014 | Project No.: 23601 | Scale: AS NOTED

ST-6
SHEET 7

FILE NAME = V:\Projects\ANY\K2\23601\CADD_MSTN\23601_cpb_dtl_cul_02.dgn
DATE/TIME = 12/1/2014
USER = 3293

NORTH ABUTMENT

AREA OF EXISTING STONE TO BE RE-POINTED (AOBE)

SOUTH ABUTMENT

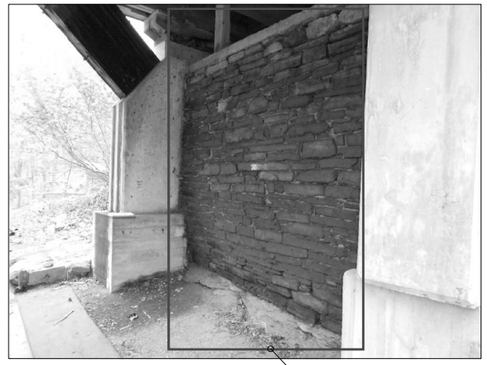

AREA OF EXISTING STONE TO BE RE-POINTED (AOBE)

SOUTH ABUTMENT WEST WINGWALL

AREA OF EXISTING STONE TO BE RE-POINTED (AOBE)

SOUTH ABUTMENT EAST WINGWALL

AREA OF EXISTING STONE TO BE RE-POINTED (AOBE)

NOTES

1. PHOTOS GIVEN ARE EXAMPLES ONLY. ALL AREAS OF LAID STONE MASONRY SHALL BE ASSESSED BY ENGINEER TO DETERMINE REQUIRED AREAS OF REPOINTING

AREAS OF RE-POINTING AT NORTH AND SOUTH ABUTMENTS (ITEM 560.0801--75)

NOT TO SCALE

EXISTING GROUTED STONE

WEST SIDE LOOKING WEST

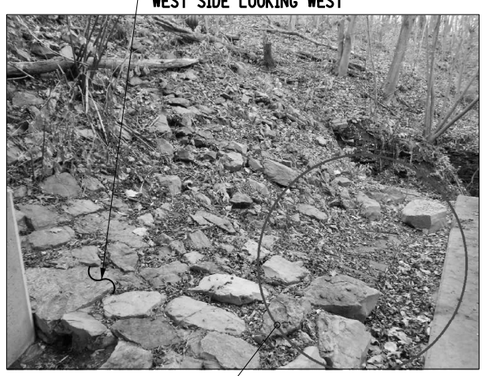

AREA OF NEW GROUTED STONE TO MATCH EXISTING GROUTED STONE

EXISTING GROUTED STONE

WEST SIDE LOOKING EAST

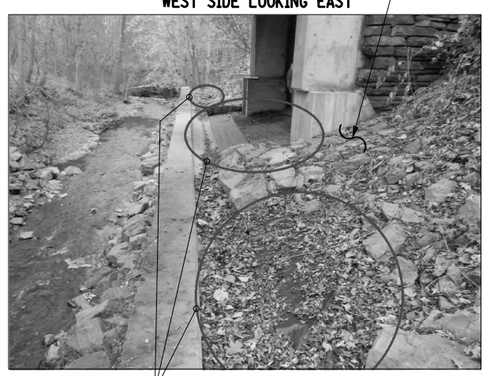

AREA OF NEW GROUTED STONE TO MATCH EXISTING GROUTED STONE

EXISTING GROUTED STONE

EAST SIDE LOOKING EAST

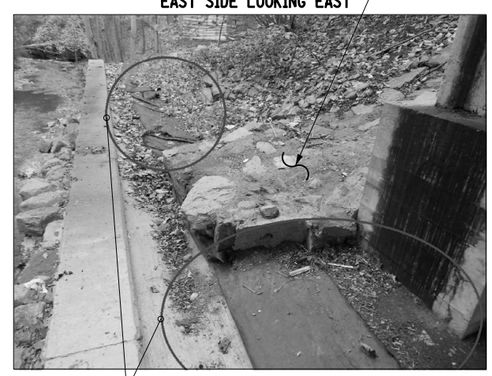

AREA OF NEW GROUTED STONE TO MATCH EXISTING GROUTED STONE

AREAS OF NEW GROUTED STONE AT SOUTH ABUTMENT (ITEM 560.0501--75)

NOT TO SCALE

B.I.N. 3210210

STATE OF NEW YORK
ANTHONY M. PAPILE
EXCELSIOR
067381
LICENSED PROFESSIONAL ENGINEER

No.	Submittal / Revision	App'd	By	Date

TOMPKINS COUNTY
TOWN OF NEWFIELD
TOMPKINS COUNTY, NEW YORK

IT IS A VIOLATION OF LAW FOR ANY PERSON, UNLESS THEY ARE ACTING UNDER THE DIRECTION OF A LICENSED PROFESSIONAL ENGINEER, ARCHITECT, LANDSCAPE ARCHITECT OR LAND SURVEYOR, TO ALTER IN ANY WAY, AN ITEM BEARING THE STAMP OF A LICENSED PROFESSIONAL ENGINEER, ARCHITECT, LANDSCAPE ARCHITECT OR LAND SURVEYOR. WHEN ALTERED, THE ALTERING ENGINEER, ARCHITECT, LANDSCAPE ARCHITECT OR LAND SURVEYOR SHALL STAMP THE DOCUMENT AND INCLUDE THE NOTATION "ALTERED BY" FOLLOWED BY THEIR SIGNATURE AND A SPECIFIC DESCRIPTION OF THE ALTERATION.

Drawing Copyright © 2013

CHA
III Winners Circle, PO Box 5269 - Albany, NY 12205-0269
Mail#: (518) 452-6050 - www.chacompanies.com

Designed: SMJ | Drawn: PKR | Checked: RDH

NEWFIELD COVERED BRIDGE
BRIDGE STREET OVER
CAYUGA INLET WEST BRANCH

AREAS OF RE-POINTING AND NEW GROUTED STONE

Issue Date: 12/1/2014 | Project No.: 23601 | Scale: AS NOTED

ST-7

SHEET 8

FILE NAME = V:\Projects\ANY\K2\23601\CADD_MSTN\23601_cpb_dtl_ms_01.dgn
DATE/TIME = 12/1/2014
USER = 3293

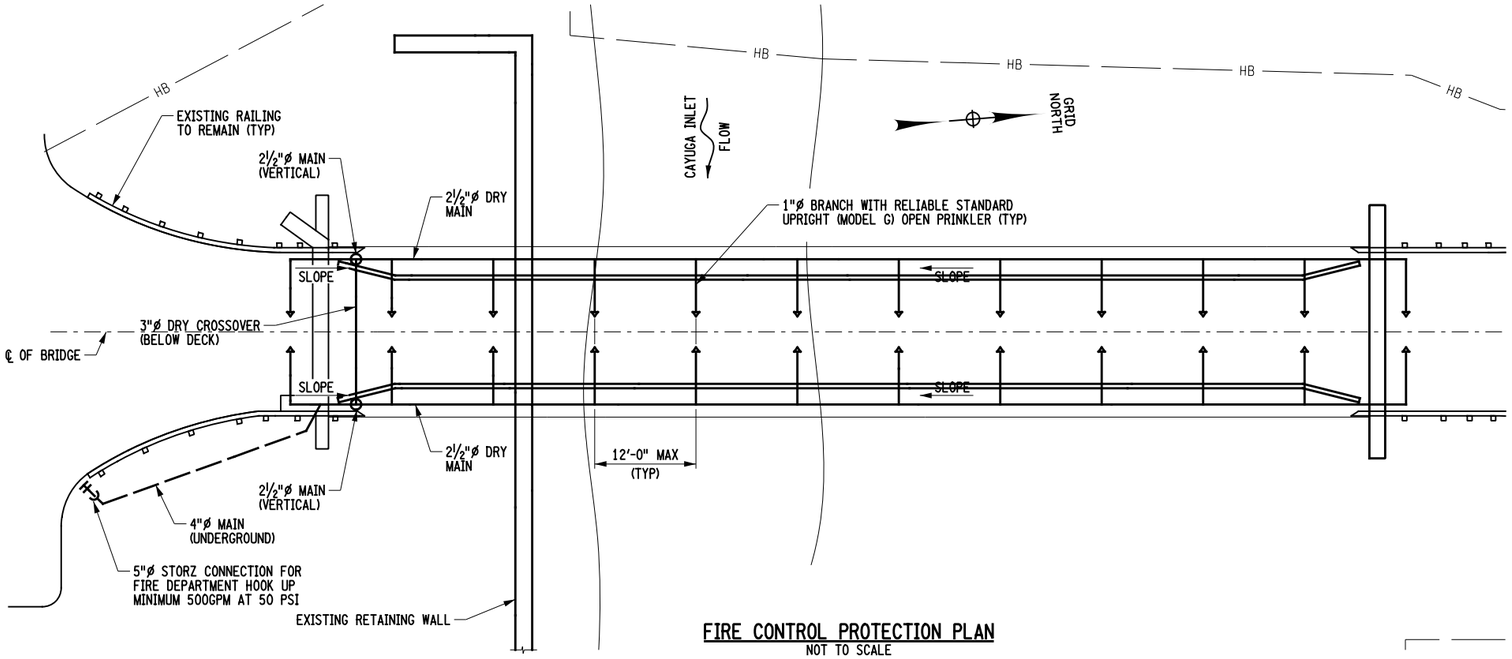

FIRE CONTROL PROTECTION PLAN

NOT TO SCALE

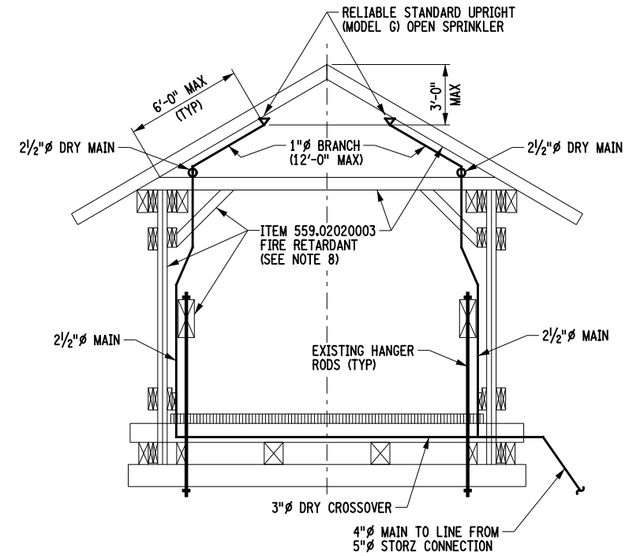

FIRE CONTROL PROTECTION SECTION A-A

NOT TO SCALE

NOTES:

1. THE FIRE PROTECTION SYSTEM DETAILED THIS SHEET, INCLUDING DESIGN CRITERIA SHOWN, SHALL BE PAID FOR UNDER ITEM 663.15 DRY HYDRANT AS A COMPLETE SYSTEM PAID FOR ON AN EACH BASIS. THE SYSTEM INCLUDES ALL COMPONENTS FROM, AND INCLUDING, THE STORZ CONNECTION FITTING TO ALL OPEN SPRINKLERS.
2. WORK ASSOCIATED WITH THE FIRE CONTROL PROTECTION SYSTEM SHALL ALSO INCLUDE PROVIDING SHOP DRAWINGS FOR REVIEW AND APPROVAL IN ADVANCE OF WORK AND DEMONSTRATION TESTING OF THE SYSTEM.
3. ALL PIPE SIZES SHALL BE HYDRAULICALLY CALCULATED IN ACCORDANCE WITH NFPA 13, CHAPTER 22.
4. PIPE SUPPORTS, HANGERS, AND SPACING SHALL BE IN COMPLIANCE WITH NFPA 13, INCLUDING, BUT NOT LIMITED TO:
   a. PIPE HANGERS SHALL BE HEIGHT ADJUSTABLE STANDARD DUTY CLEVIS TYPE WITH CROSS BOLT AND NUT.
   b. HANGER RODS SHALL BE FULLY THREADED WITH DOUBLE NUTS.
   c. SIDE BEAM BRACKETS SHALL BE ATTACHED TO EXISTING TIMBER WITH ½"ø LAG SCREWS IN PREDRILLED HOLES.
5. ALL PIPING AND CONNECTION MATERIALS RELATED TO THE SYSTEM SHALL BE GALVANIZED, AND PAINTED BLACK.
6. RELIABLE STANDARD UPRIGHT (MODEL G) OPEN SPRINKLERS SHALL BE ORIENTED IN THE UPRIGHT POSITION.
7. SYSTEM SHALL BE DRAINABLE BY GRAVITY - ALL PIPE SHALL BE SLOPED TO DRAIN.
8. AN INSECTICIDE/FUNGICIDE COATING AND FIRE RETARDANT COATING SHALL BE APPLIED TO ROOF RAFTERS AND BOARDS, TRUSS MEMBERS (CHORDS AND LATTICE), OVERHEAD LATERAL BRACING, TIMBER ARCHES AND INTERIOR FACE OF THE SIDING PAID PER ITEM 559.02020003.
9. DETAILS ON THE DRAWINGS LABELED AS "NOT TO SCALE" ARE INTENTIONALLY DRAWN NOT TO SCALE FOR VISUAL CLARITY. ALL OTHER DETAILS, FOR WHICH NO SCALE IS SHOWN, ARE DRAWN PROPORTIONAL AND ARE FULLY DIMENSIONED.

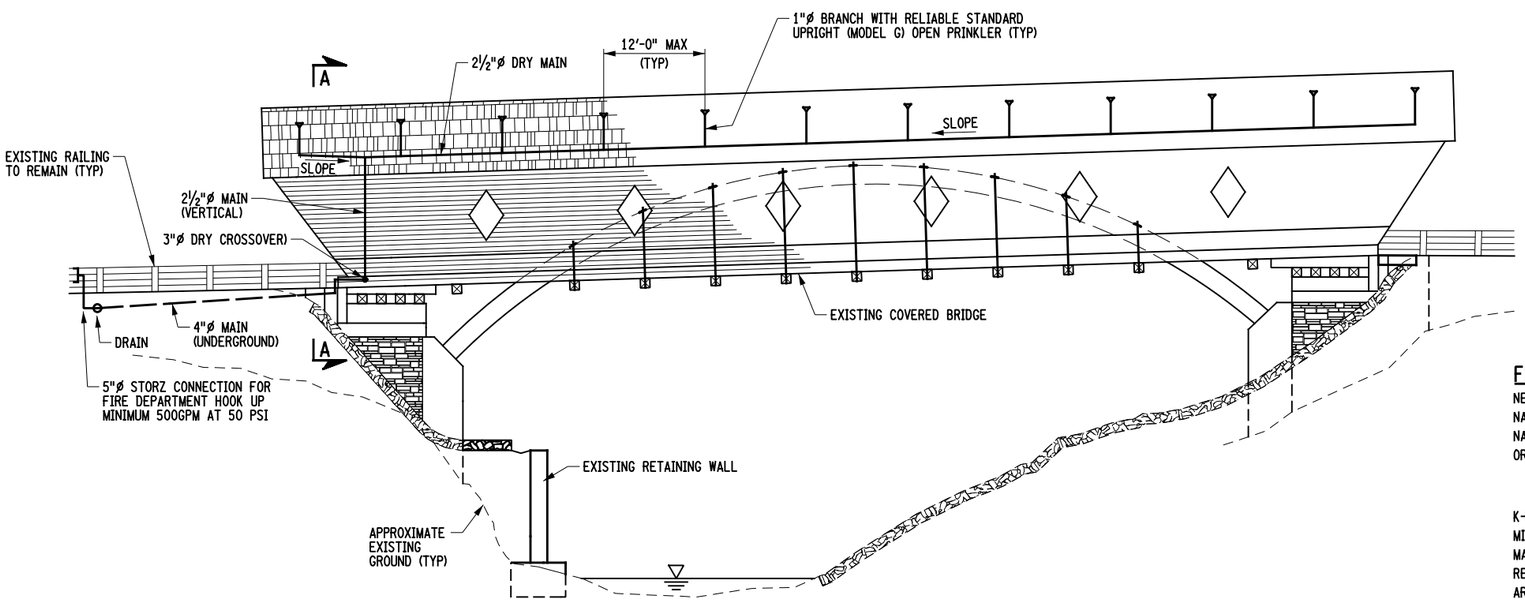

FIRE CONTROL PROTECTION ELEVATION

NOT TO SCALE

FIRE CONTROL PROTECTION DESIGN CRITERIA:

NEW YORK STATE BUILDING CODE.

NATIONAL FIRE PROTECTION ASSOCIATION 13, 2007.

NATIONAL FIRE PROTECTION ASSOCIATION 502, 2011

ORDINARY GROUP 1 HAZARD:
- -0.15 GPM/1500 SQ FT.
- -ADD 30% AREA FOR SLOPED CEILING
- -450+1500 = 1950 SQ FT.

K-FACTOR = 5.6

MINIMUM PRESSURE AT OPEN SPRINKLER = 20 PSI.

MAXIMUM PRESSURE AT OPEN SPRINKLER = 175 PSI.

RELIABLE STANDARD UPRIGHT (MODEL G) OPEN SPRINKLER.

AREA PER OPEN SPRINKLER = 130 SQ FT MAX.

NO HOSE ALLOWANCE ADDED.

GALVANIZED PIPING INSTALLED PER NATIONAL FIRE PROTECTION ASSOCIATION 13, 2007.

PUMPER TRUCK SHALL BE CAPABLE OF DELEIVERING 500 GPM AT 50 PSI.

B.I.N. 3210210

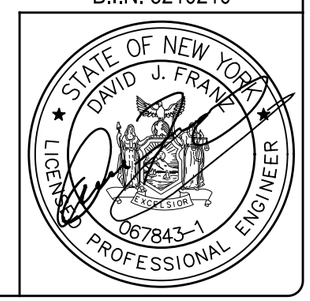

No.	Submittal / Revision	App'd	By	Date

TOWN OF NEWFIELD
TOMPKINS COUNTY, NEW YORK

IT IS A VIOLATION OF LAW FOR ANY PERSON, UNLESS THEY ARE ACTING UNDER THE DIRECTION OF A LICENSED PROFESSIONAL ENGINEER, ARCHITECT, LANDSCAPE ARCHITECT OR LAND SURVEYOR, TO ALTER IN ANY WAY, IF AN ITEM BEARING THE STAMP OF A LICENSED PROFESSIONAL IS ALTERED, THE ALTERING ENGINEER, ARCHITECT, LANDSCAPE ARCHITECT OR LAND SURVEYOR SHALL STAMP THE DOCUMENT AND INCLUDE THE NOTATION "ALTERED BY" FOLLOWED BY THEIR SIGNATURE AND THE DATE OF THE ALTERATION, AND A SPECIFIC DESCRIPTION OF THE ALTERATION.

CHA
Drawing Copyright © 2013
III Winners Circle, PO Box 5269 - Albany, NY 12205-0269
Mail: (518) 453-4500 • www.chacompanies.com

Designed: SMJ | Drawn: PKR | Checked: RDH

NEWFIELD COVERED BRIDGE
BRIDGE STREET OVER
CAYUGA INLET WEST BRANCH

FIRE CONTROL PROTECTION
GENERAL PLAN AND ELEVATION

Issue Date: 12/1/2014 | Project No.: 23601 | Scale: AS NOTED

ST-8

SHEET 9

FILE NAME = W:\Projects\ANY\K2\23601\CADD_MSTN\23601_cpb_gen_fire.dgn
DATE/TIME = 12/1/2014
USER = 3293

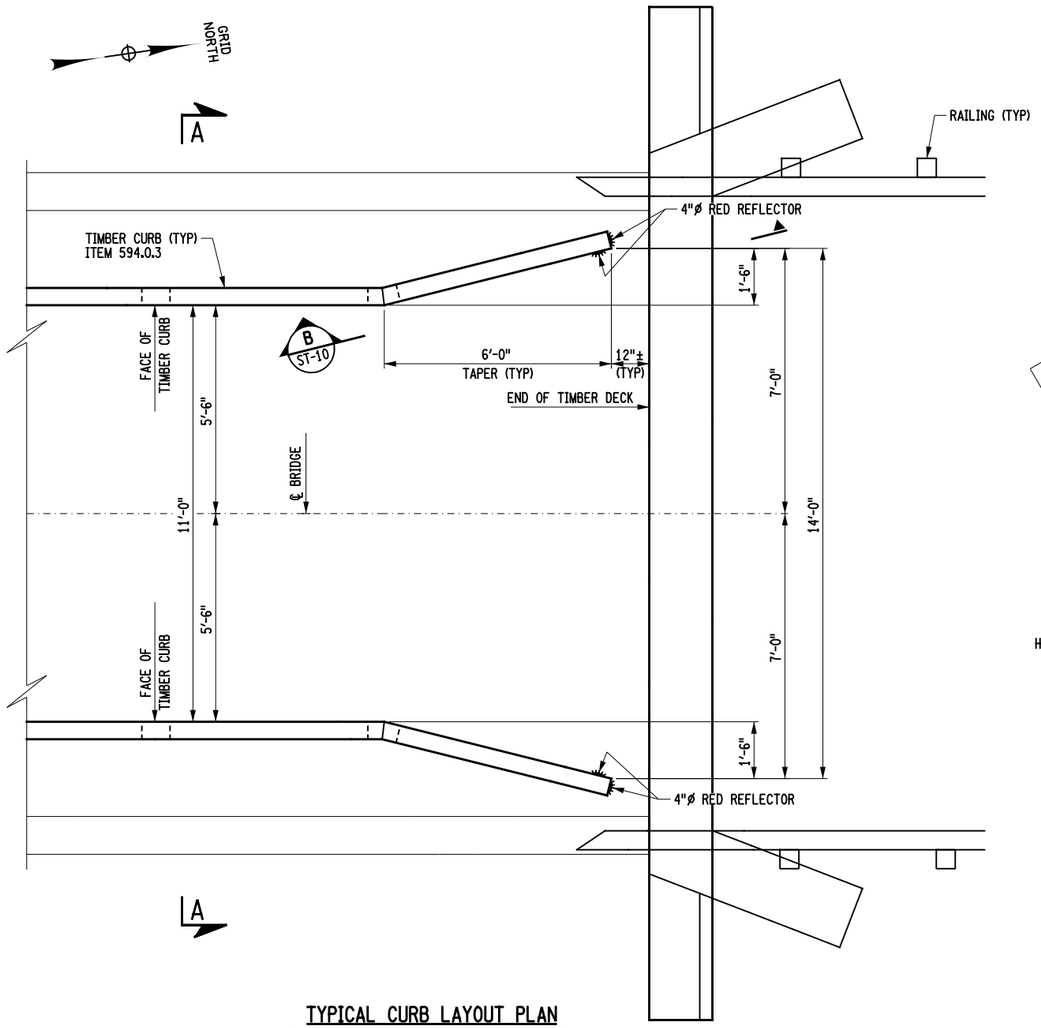

TYPICAL CURB LAYOUT PLAN

(END ABUTMENT SHOWN, BEGIN ABUTMENT SIMILAR)
NOT TO SCALE

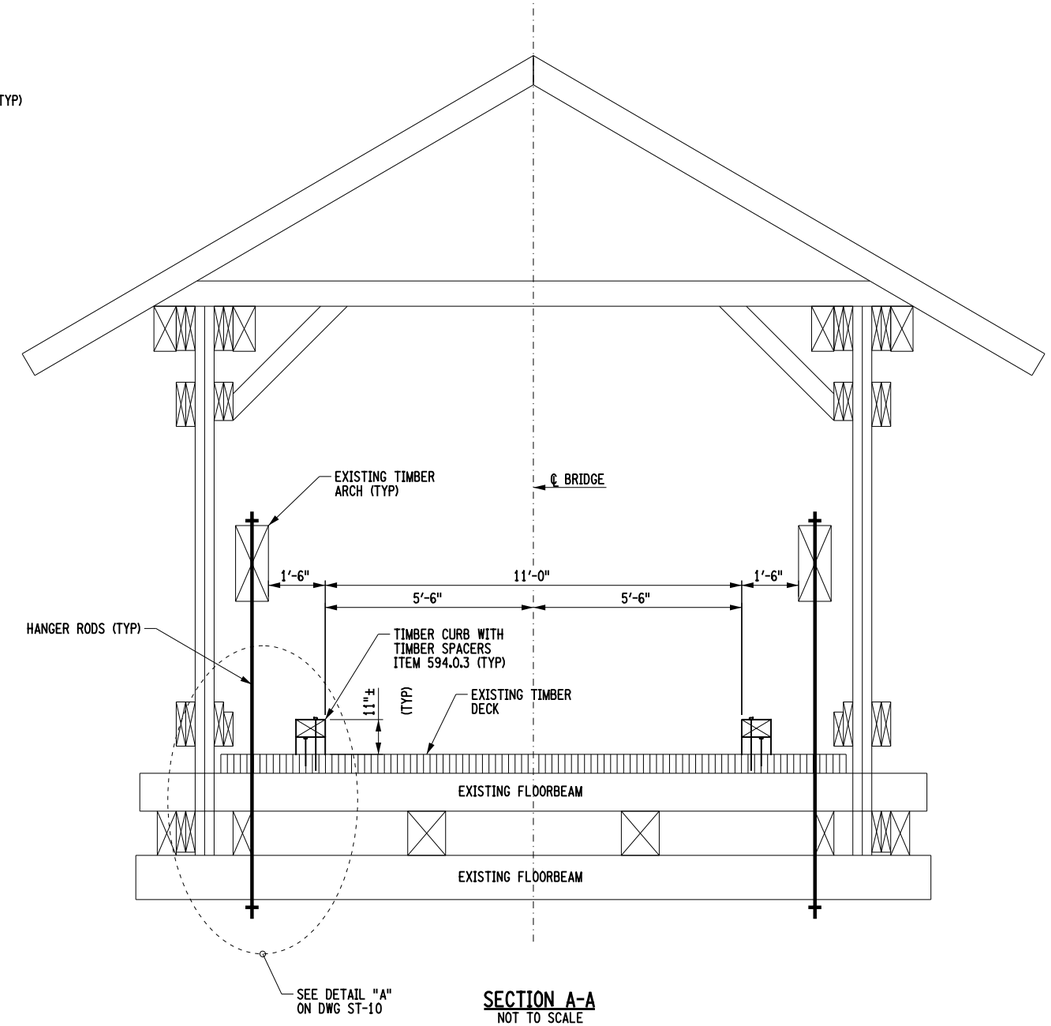

SECTION A-A

NOT TO SCALE

NOTES

FOR ADDITIONAL NOTES AND DETAILS SEE ST-10.

DETAILS ON THE DRAWINGS LABELED AS "NOT TO SCALE" ARE INTENTIONALLY DRAWN NOT TO SCALE FOR VISUAL CLARITY. ALL OTHER DETAILS, FOR WHICH NO SCALE IS SHOWN, ARE DRAWN PROPORTIONAL AND ARE FULLY DIMENSIONED.

B.I.N. 3210210

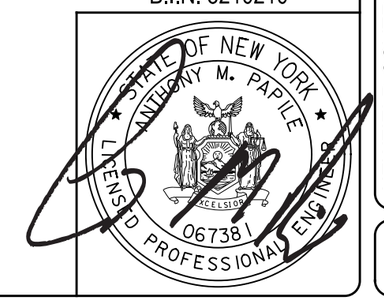

No.	Submittal / Revision	App'd	By	Date

TOMPKINS COUNTY
TOWN OF NEWFIELD
TOMPKINS COUNTY, NEW YORK

IT IS A VIOLATION OF LAW FOR ANY PERSON, UNLESS THEY ARE ACTING UNDER THE DIRECTION OF A LICENSED PROFESSIONAL ENGINEER, ARCHITECT, LANDSCAPE ARCHITECT OR LAND SURVEYOR, TO ALTER IN ANY WAY, IF AN ITEM BEARING THE STAMP OF A LICENSED PROFESSIONAL IS ALTERED, THE ALTERING ENGINEER, ARCHITECT, LANDSCAPE ARCHITECT OR LAND SURVEYOR SHALL STAMP THE DOCUMENT AND INCLUDE THE NOTATION "ALTERED BY" FOLLOWED BY THEIR SIGNATURE AND A SPECIFIC DESCRIPTION OF THE ALTERATION.

Drawing Copyright © 2013

CHA
III Wilmers Circle, P.O Box 5269 - Albany, NY 12205-0269
Mail: (518) 453-4500 - www.chacompanies.com

Designed: PCP | Drawn: PKR | Checked: PCP

NEWFIELD COVERED BRIDGE
BRIDGE STREET OVER
CAYUGA INLET WEST BRANCH

TIMBER CURB DETAILS
(1 OF 2)

Issue Date: 12/1/2014 | Project No.: 23601 | Scale: SCALE

ST-9

SHEET 10

FILE NAME = V:\Projects\ANY\K2\23601\CADD_MSTN\23601_cpb_dtl_crb_01.dgn
DATE/TIME = 12/1/2014
USER = 3293

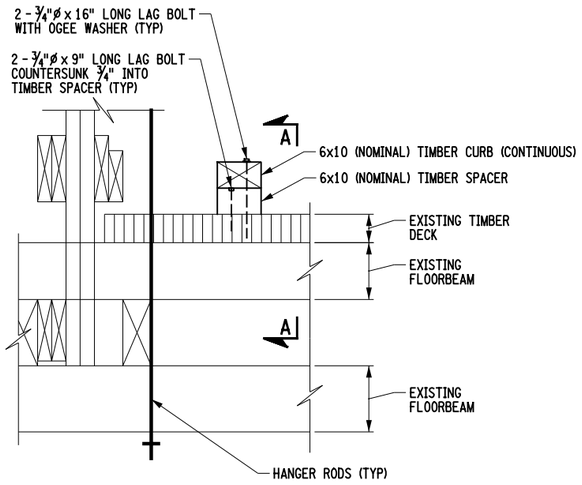

DETAIL "A"
NOT TO SCALE

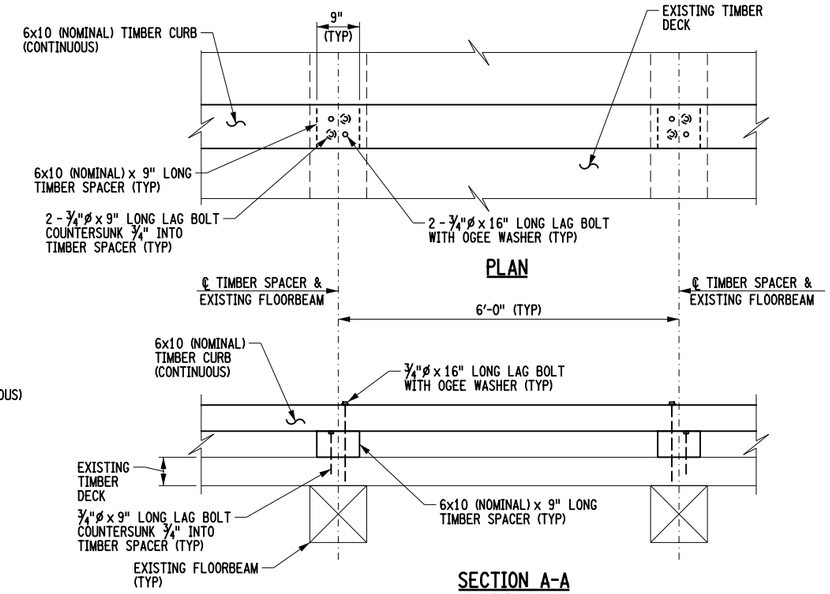

SECTION A-A
NOT TO SCALE

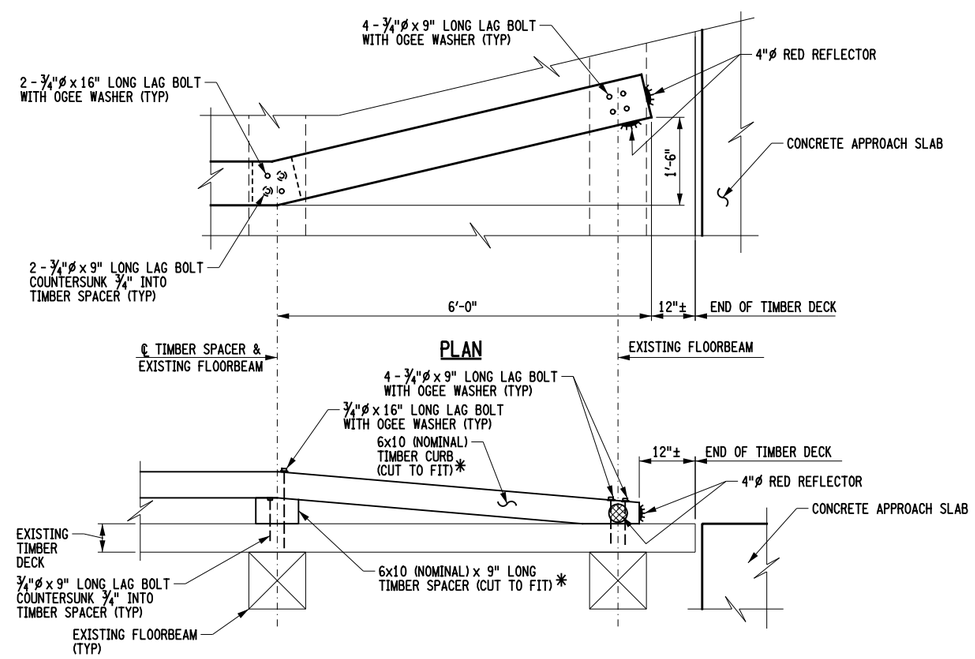

B / ST-9 **TYPICAL TAPERED CURB SECTION**
NOT TO SCALE

NOTES

*- TIMBER SHALL BE CUT TO CONFORM TO THE ANGLE, HORIZONTALLY AND VERTICALLY, AND TREATED AFTER CUTTING WITH THREE COATS OF PRESERVATIVE PER AWPA M4.

ALL TIMBER AND ALL HARDWARE TO BE PAID FOR UNDER ITEM 594.03 TREATED TIMBER AND LUMBER.

TIMBER TO BE TREATED WITH OIL BORNE WOOD PRESERVATIVE PER SPECIFICATION 708-32.

ALL BOLTS, WASHERS AND MISCELLANEOUS HARDWARE SHALL BE HOT DIPPED GALVANIZED.

THE CONTRACTOR SHALL INSTALL TWO 4-INCH DIAMETER RED REFLECTORS AT THE END OF THE TIMBER CURB AT EACH QUADRANT, PAYMENT TO BE INCIDENTAL TO THE TIMBER CURB ITEM.

DETAILS ON THE DRAWINGS LABELED AS "NOT TO SCALE" ARE INTENTIONALLY DRAWN NOT TO SCALE FOR VISUAL CLARITY. ALL OTHER DETAILS, FOR WHICH NO SCALE IS SHOWN, ARE DRAWN PROPORTIONAL AND ARE FULLY DIMENSIONED.

B.I.N. 3210210

No.	Submittal / Revision	App'd	By	Date

TOWN OF NEWFIELD
TOMPKINS COUNTY, NEW YORK

IT IS A VIOLATION OF LAW FOR ANY PERSON, UNLESS THEY ARE ACTING UNDER THE DIRECTION OF A LICENSED PROFESSIONAL ENGINEER, ARCHITECT, LANDSCAPE ARCHITECT OR LAND SURVEYOR, TO ALTER IN ANY WAY, IF AN ITEM BEARING THE STAMP OF A LICENSED PROFESSIONAL IS ALTERED, THE ALTERING ENGINEER, ARCHITECT, LANDSCAPE ARCHITECT OR LAND SURVEYOR SHALL STAMP THE DOCUMENT AND INCLUDE THE NOTATION "ALTERED BY" FOLLOWED BY THEIR SIGNATURE AND A SPECIFIC DESCRIPTION OF THE ALTERATION.

CHA
Drawing Copyright © 2013
III Winners Circle, PO Box 5269 • Albany, NY 12205-0269
Main: (518) 453-4500 • www.chacompanies.com

Designed: PCP	Drawn: PKR	Checked: PCP

NEWFIELD COVERED BRIDGE
BRIDGE STREET OVER
CAYUGA INLET WEST BRANCH

TIMBER CURB DETAILS
(2 OF 2)

Issue Date: 12/1/2014	Project No.: 23601	Scale: SCALE

ST-10
SHEET 11

FILE NAME = W:\Projects\ANY\K2\23601\CADD_MSTN\23601_cpb_dtl_crb_02.dgn
DATE/TIME = 12/1/2014
USER = 3293