FED ROAD REG. NO.	STATE	CONTRACT NO.	SHEET NO.	TOTAL SHEETS
1	N.Y.			

CODDINGTON ROAD
XXX
TOWN OF ITHACA
TOMPKINS COUNTY
P.I.N. 3753.24

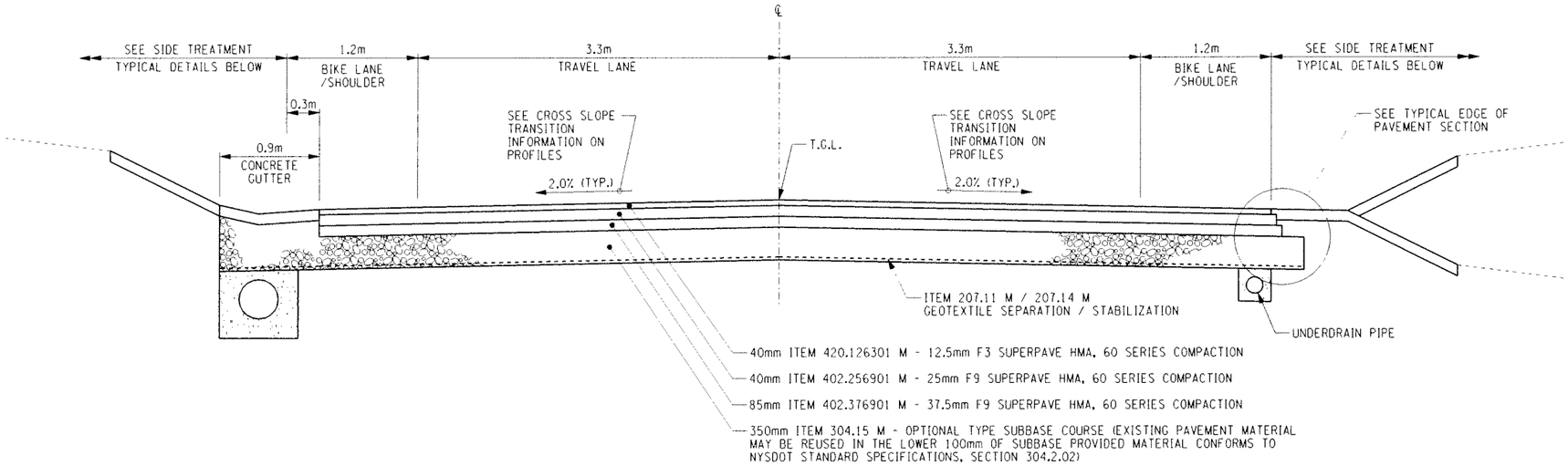

TYPICAL ROADWAY SECTION

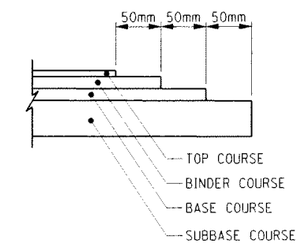

TYPICAL EDGE OF PAVEMENT SECTION

NOT TO SCALE

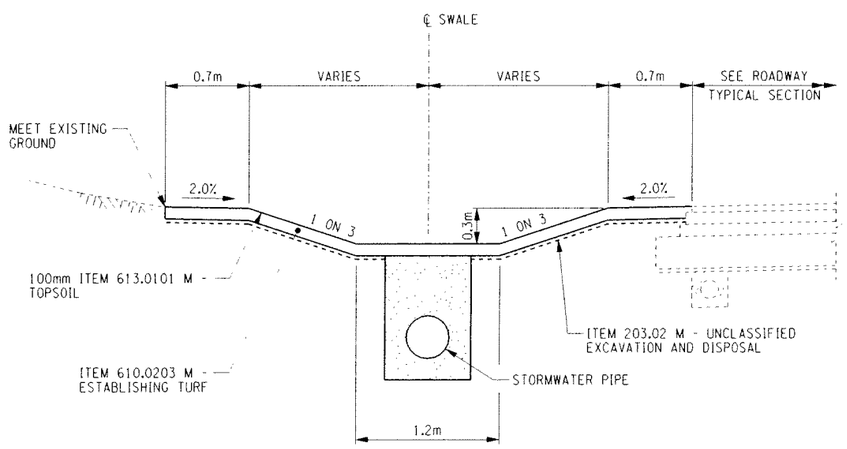

TYPICAL SWALE SECTION

LEFT	RIGHT
STA. 1+800 TO STA. 1+815	STA. 1+455 TO STA. 1+470
STA. 2+325 TO STA. 2+355	STA. 1+575 TO STA. 1+590
STA. 2+655 TO STA. 2+910	
STA. 3+060 TO STA. 3+180	
STA. 3+255 TO STA. 3+825	
STA. 3+900 TO STA. 4+120	

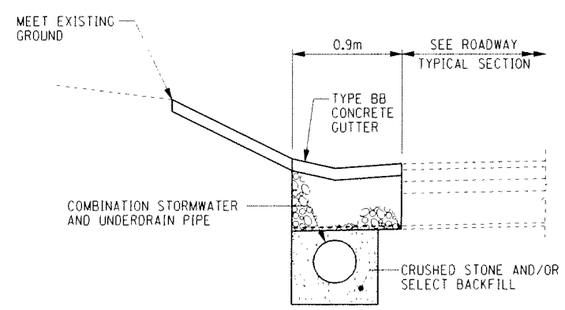

TYPICAL GUTTER SECTION

LEFT	RIGHT
STA. 1+365 TO STA. 1+800	STA. 1+590 TO STA. 1+605
STA. 1+905 TO STA. 2+325	STA. 1+695 TO STA. 1+800
STA. 2+400 TO STA. 2+655	STA. 1+905 TO STA. 1+995
STA. 2+910 TO STA. 3+060	STA. 2+205 TO STA. 2+500
STA. 3+180 TO STA. 3+255	STA. 2+295 TO STA. 2+325
STA. 3+825 TO STA. 3+900	STA. 2+400 TO STA. 2+460
	STA. 2+895 TO STA. 2+925
	STA. 3+015 TO STA. 3+045
	STA. 3+480 TO STA. 3+510

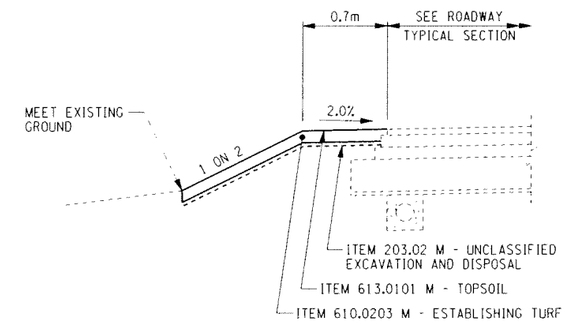

TYPICAL OPEN SECTION

LEFT	RIGHT
STA. 1+815 TO STA. 1+905	STA. 1+365 TO STA. 1+455
STA. 2+355 TO STA. 2+400	STA. 1+470 TO STA. 1+575
	STA. 1+605 TO STA. 1+695
	STA. 1+800 TO STA. 1+905
	STA. 1+995 TO STA. 2+205
	STA. 2+325 TO STA. 2+400
	STA. 2+460 TO STA. 2+895
	STA. 2+925 TO STA. 3+015
	STA. 3+045 TO STA. 3+480
	STA. 3+510 TO STA. 4+120

ALTERNATIVE 6 (70 KM/H)

ALL DIMENSIONS ARE IN m UNLESS OTHERWISE NOTED

0 0.5 1 1.5 2 2.5 M
SCALE

AS BUILT REVISIONS

SIGNATURE DATE

TYPICAL SECTIONS

DEWBERRY-GOODKIND, INC.
CONSULTING ENGINEERS AND PLANNERS
ROCHESTER, NEW YORK

DOCUMENT NAME	REGION	DATE	DRAWING NO.
375324-TS01.dgn	3	6/2007	TS-01

DESIGN SUPERVISOR RWC JOB MANAGER DBA DESIGNED BY DBA/SW/CS CHECKED BY RWC/DBA/SW/CS ESTIMATED BY DBA/SW/CS DRAFTED BY SW/CS/RS CHECKED BY CDX

FILE NAME = G:\9A0240\CAD\Civil\75 Percent Design\ALT 6\375324-TS01.dgn
DATE/TIME = 7/17/2007 3:45:22 PM